CE TYPE 2RHIF-SR

STAINLESS STEEL

High rating, IP 67

CHARACTERISTICS

ENCODER TYPE	Hollow shaft encoder, Stainless steel (blind end)
SMD - TECHNOLOGY	Strong compact electronics
HIGH IP-RATING	Std. IP 67
LOW CURRENT CONSUMPTION	To be connected directly to PLC'S and counters
SHORT CIRCUIT PROTECTION	Thermal shut down at 155°C
WIDE SUPPLY RANGE	Min. 4,5V to max. 30V
STRONG MEC. CONSTRUCTION	Based on 2 precision ball bearings, for harsh industrial environments

ELECTRICAL SPECIFICATIONS

	At +25°C
Output waveform	Incremental (A, B, Z and inverted)
Zero or index pulse	(Z) one pr. rev.
Output	Totempole (TP)
Supply-voltage (Vin)	Min 4,5V to Max. 30V * Reverse polarity protection
Current (no load)	Max. 45 mA
Max. load pr. output	30 mA - (Short circuit protected) *
V Out low	Max. 500 mV @ I =10 mA
Operating temp.	- 40°C to + 85°C
Storage temp.	- 40°C to + 85°C
Max. pulse frequency	300 kHz *
V out high	Min. (Vin -0,6) @ I = -10mA Min. (Vin -1,3) @ I = -25mA
Cable data	8 leads (0,14 mm²)pairtwisted/shielded
Output signals	Standard, Inverted, Differential (RS-422A compatible @ 5V)
Certified acc. to	EN 50081-1 and EN 50082-2

* = It is not recommended to combine max. Value for all 3 parameters

MECHANICAL SPECIFICATIONS

Weight	500 g (cable take out side wise) 300 g (cable take out back wise)
Materials : Housing Shaft Bearings	Stainless steel (AISI303) (A2) Stainless steel (AISI303) (A2) Lifetime lubricated ball bearings
H.-Shaft dimensions	View shaft options - next page
H.-Shaft loads	Axial max. 50 N Radial max. 50 N
Max. rev.	3600 rev./min.
IP-rating	Standard IP 67 Cable gland IP67 Static seal between cap and housing (O-ring) Rotary seal for IP67
Start torque	< 0,05 Nm at 25°C
Mass moment of inertia	6 gcm²
Max. shock	100 G/11 ms
Bump	10 G - 16 ms (1000 x 3 axis)
Vibration	(10 - 2000 Hz)/10 G

OUTPUT CIRCUIT

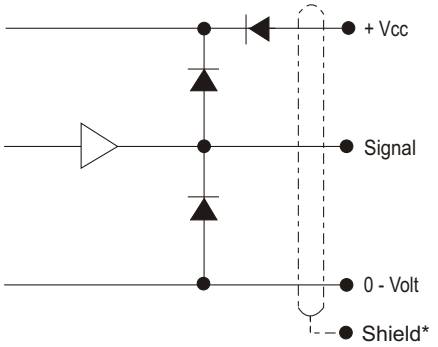

* Shield connected to housing

MECHANICAL DIMENSIONS

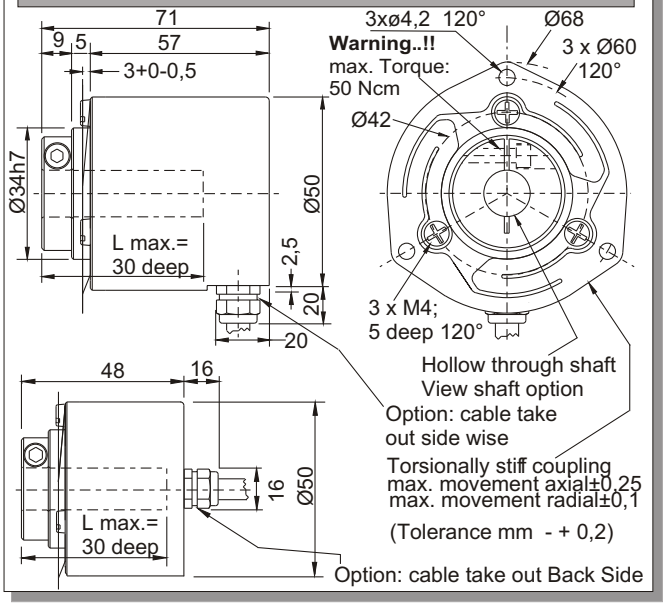

OUTPUT WAVEFORM

Rotation: Clockwise (cw) from shaftside

(inv = inverted channels)

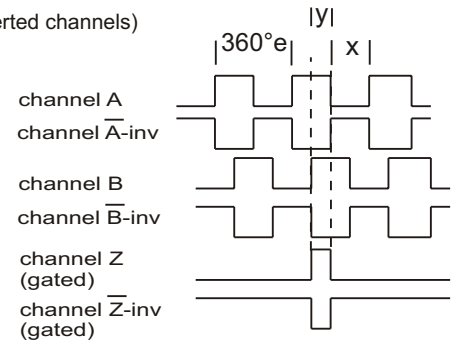

X = 180°e ± 36°e and Y = 90°e ± 18°e
Z puls: Gated with A and B (standard)

Options: TTL or HTL compatible. Open Collector NPN or PNP
Gated Z-puls or none-gated Z-puls.
View more Output options in section 16 - page 1 to 2

ORDERING CODES

	Options	Ordering codes
Pulses pr. rev.:	No. of pulses	XXXXX
Output signal:	Normal, Standard, A, B, Z (3 channel)	N
	Differential: A, B, Z and A-inv, B-inv, Z-inv (6 channel)	D
	Line driver OL 7272 for extra long cable, up to 100 meters (Differential)	M
	Line driver chip 26C31 (V out low < 0,4 V) (RS-422A compatible @ 5V) Only 5 Volt (Differential)	L
Shaft dimensions Max deep 30 mm Tolerance G7	ø8 mm	08
	ø10 mm	10
	ø12 mm	12
	ø14 mm	14
	ø15 mm	15
	ø16 mm	16
IP-rating:	IP 67	67
Length of cable:	Standard 1 meter	01
	No. of meters	XX
Cable take out: (or connector)	Back (Axial)	B
	Side (Radial)	S
Anti rotation Spring coupling:	View Section 15 page 1 to 8	
Connector:	Coninvers Connector View Section 15 page 6 to 8	

More accessories
Anti rotation spring and adaptors: View section 12 page 1 to 8

CONNECTIONS

Color code	Standard
Pink	Ch. A
Grey*	Ch. A Gnd
Green	Ch. B
Yellow*	Ch. B Gnd
White	Ch. Z
Brown*	Ch. Z Gnd
Red	Vcc
Blue*	Gnd

*Blue, grey, yellow and brown are internal connected

Color code	Differential
Pink	Ch. A
Grey	Ch. A inv.
Green	Ch. B
Yellow	Ch. B inv.
White	Ch. Z
Brown	Ch. Z inv.
Red	Vcc
Blue	Gnd

PULSES/REV.

1	32	125	600	2048
2	36	150	635	2500
5	40	180	720 *	3000
6	50	200	800	3600
8	60	250	1000	4000
10	64	300	1024	4096
15	75	360	1131	5000
16	80	400	1250	9000
20	90	455	1500	
25	100	500	2000	
30				

* = Delivery without 0-puls only

Advanced Output Options:

Options	Ordering codes
Normal Open Collector NPN	NON
Differential Open Collector NPN	DON
Normal Open Collector PNP	NOP
Differential Open collector PNP	DOP

To order, replace [ ] (Output signal) with [O] (Output signal)

2RHIF-SR [ ][ ][ ][ ][ ] Pulses [ ] Output signal [ ][ ] H.-Shaft [6][7] IP-rating [ ][ ] Length of cable [ ] Cable take out [ ][ ][ ][ ][ ][ ][ ][ ] Anti Rotation Spring Coupling [ ][ ][ ][ ][ ][ ][ ][ ] Accessories Order Number