PART E-01 ~ E-13

AC/DC INDUCTIVE PROXIMITY SWITCH

Diameter	M 12			M 12			M 12		
● Shielded ○ non-Shielded	●		○	●		○	●		○
Switching Distance Sn mm	2 mm		4 mm	2 mm		4 mm	2 mm		4 mm
Housing Material	stainless steel or nickel plated brass			stainless steel or nickel plated brass			stainless steel or nickel plated brass		
● With LED ○ Without LED	●			●			●		
Dimensions (unit: mm)	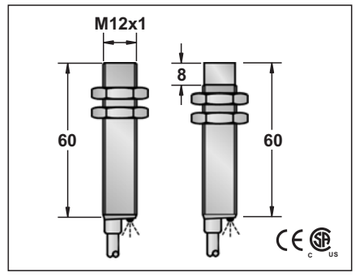			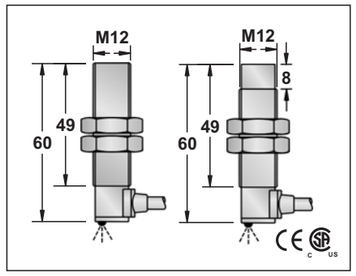			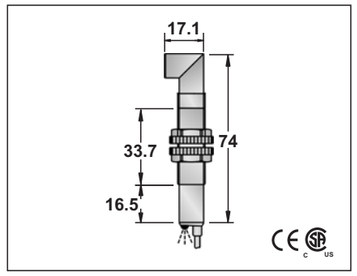		
Operating Voltage	20-250 VAC, 50-60 Hz; 20-250 VDC			20-250 VAC, 50-60 Hz; 20-250 VDC			20-250 VAC, 50-60 Hz; 20-250 VDC		
Ripple	DC RIPPLE <10%			DC RIPPLE <10%			DC RIPPLE <10%		
No Load Current	<2.5mA			<2.5mA			<2.5mA		
Max. Load Current	100mA			100mA			100mA		
Leakge Current	<2.5mA			<2.5mA			<2.5mA		
Surge Current	2.2A for 20ms			2.2A for 20ms			2.2A for 20ms		
Min. Load Current	5mA			5mA			5mA		
Voltage Drop	<=10 VAC :<=8 VDC			<=10 VAC :<=8 VDC			<=10 VAC :<=8 VDC		
Switching Frequency	25HZ AC; 40 Hz DC			25HZ AC; 40 Hz DC			25HZ AC; 40 Hz DC		
Response Time	10ms/10ms			10ms/10ms			10ms/10ms		
Switching Hysteresis	<15%(Sr)			<15%(Sr)			<15%(Sr)		
Repeat Accuracy	<1.0% (Sr)			<1.0% (Sr)			<1.0% (Sr)		
Protection Category	IP67			IP67			IP67		
Operating Temperature	-25°C - +70°C			-25°C - +70°C			-25°C - +70°C		
Temperature Drift	<10% (Sr)			<10% (Sr)			<10% (Sr)		
Short Circuit Protection	YES (DC 20~30V only)			YES (DC 20~30V only)			YES (DC 20~30V only)		
Overload Trip Point	-			-			-		
Time Delay Before Availability	-			-			-		
EMC	RFI>3V/m / EFT>1KV / ESD>4KV (contact)			RFI>3V/m / EFT>1KV / ESD>4KV (contact)			RFI>3V/m / EFT>1KV / ESD>4KV (contact)		
Shock / Vibration	IEC 60947-5-2,Part 7.4.1 / IEC 60947-5-2,Part 7.4.2			IEC 60947-5-2,Part 7.4.1 / IEC 60947-5-2,Part 7.4.2			IEC 60947-5-2,Part 7.4.1 / IEC 60947-5-2,Part 7.4.2		
Material Active Face	PBT			PBT			PBT		
DC 3 wire 10-30V NPN N.O.									
DC 3 wire 10-30V NPN N.C.									
DC 3 wire 10-30V PNP N.O.									
DC 3 wire 10-30V PNP N.C.									
DC 4 wire 10-30V Changeover PNP (N.O. & N.C.)									
DC 4 wire 10-30V Changeover NPN (N.O. & N.C.)									
DC 2 wire 10-60V N.O.									
DC 2 wire 10-60V N.C.									
DC 3 wire 10-55v NPN N.O. or NAMUR									
DC 3 wire 10-55v NPN N.C.									
DC 3 wire 10-55v PNP N.O.									
DC 3 wire 10-55v PNP N.C.									
AC 2 wire 20-250V N.O.									
AC 2 wire 20-250V N.C.									
AC 2 wire 20-250V N.O. or N.C. Changeable									
AC/DC 2 wire 20-250V N.O.	FCM1-1202U-A3L2	11	FCM2-1204U-A3L2	FCM1-1202U-A3L2Y	11	FCM2-1204U-A3L2Y	FCM1-1202U-A3L2Z	11	FCM2-1204U-A3L2Z
AC/DC 2 wire 20-250V N.C.	FCM1-1202U-B3L2	12	FCM2-1204U-B3L2	FCM1-1202U-B3L2Y	12	FCM2-1204U-B3L2Y	FCM1-1202U-B3L2Z	12	FCM2-1204U-B3L2Z
AC/DC 2 wire 20-250V N.O. or N.C. Changeable									
Remark									
Cable 2M (PVC)	4ϕ3x0.34			4ϕ3x0.34			4ϕ3x0.34		
Weight	Approx.77 g		Approx.76 g	Approx.77 g		Approx.76 g	Approx.77 g		Approx.76 g

AC/DC INDUCTIVE PROXIMITY SWITCH

M 18			M 18			M 18		
●	○		●	○		●	○	
5 mm	8 mm		5 mm	8 mm		5 mm	8 mm	
stainless steel or nickel plated brass			stainless steel or nickel plated brass			stainless steel or nickel plated brass		
●			●			●		
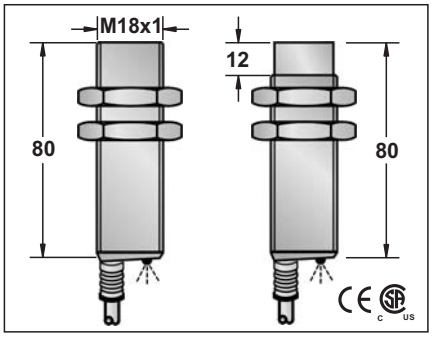			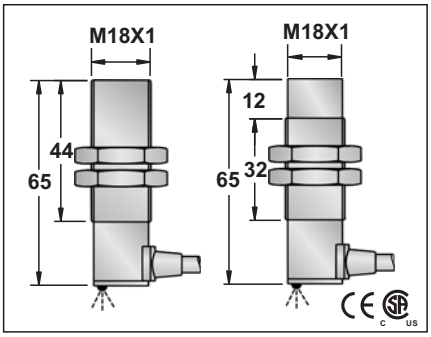			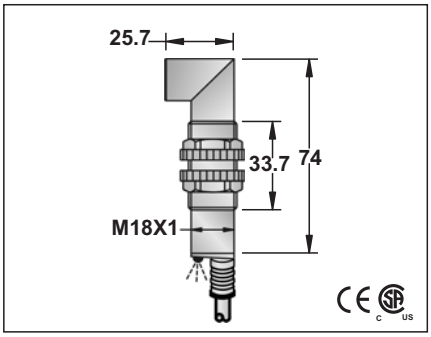		
20-250 VAC, 50-60 Hz; 20-250 VDC			20-250 VAC, 50-60 Hz; 20-250 VDC			20-250 VAC, 50-60 Hz; 20-250 VDC		
DC RIPPLE <10%			DC RIPPLE <10%			DC RIPPLE <10%		
<2.5mA			<2.5mA			<2.5mA		
200mA			200mA			200mA		
<2.5mA			<2.5mA			<2.5mA		
2.2A for 20ms			2.2A for 20ms			2.2A for 20ms		
5mA			5mA			5mA		
<=10 VAC :<=8 VDC			<=10 VAC :<=8 VDC			<=10 VAC :<=8 VDC		
25HZ AC; 40 Hz DC			25HZ AC; 40 Hz DC			25HZ AC; 40 Hz DC		
10ms/10ms			10ms/10ms			10ms/10ms		
<15%(Sr)			<15%(Sr)			<15%(Sr)		
<1.0% (Sr)			<1.0% (Sr)			<1.0% (Sr)		
IP67			IP67			IP67		
-25°C - +70°C			-25°C - +70°C			-25°C - +70°C		
<10% (Sr)			<10% (Sr)			<10% (Sr)		
YES			YES			YES		
-			-			-		
-			-			-		
RFI>3V/m / EFT>1KV / ESD>4KV (contact)			RFI>3V/m / EFT>1KV / ESD>4KV (contact)			RFI>3V/m / EFT>1KV / ESD>4KV (contact)		
IEC 60947-5-2,Part 7.4.1 / IEC 60947-5-2,Part 7.4.2			IEC 60947-5-2,Part 7.4.1 / IEC 60947-5-2,Part 7.4.2			IEC 60947-5-2,Part 7.4.1 / IEC 60947-5-2,Part 7.4.2		
PBT			PBT			PBT		
FCM1-1805U-A3L2	11	FCM2-1808U-A3L2	FCM1-1805U-A3L2Y	11	FCM2-1808U-A3L2Y	FCM1-1805U-A3L2Z	11	FCM2-1808U-A3L2Z
FCM1-1805U-B3L2	12	FCM2-1808U-B3L2	FCM1-1805U-B3L2Y	12	FCM2-1808U-B3L2Y	FCM1-1805U-B3L2Z	12	FCM2-1808U-B3L2Z
5.0ϕ44x0.1			5.0ϕ44x0.1			5.0ϕ44x0.1		
Approx.161 g	Approx.160 g		Approx.161 g	Approx.160 g		Approx.161 g	Approx.160 g	

AC/DC INDUCTIVE PROXIMITY SWITCH

M 30	
●	○
10 mm	15 mm
stainless steel or nickel plated brass	
●	

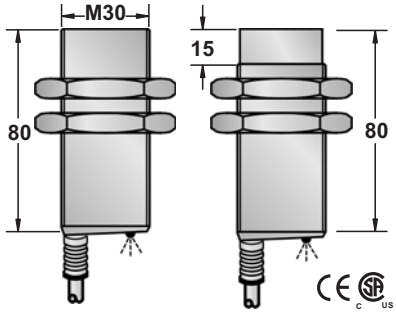

20-250 VAC, 50-60 Hz; 20-250 VDC	
DC RIPPLE <10%	
<2.5mA	
200mA	
<2.5mA	
2.2A for 20ms	
5mA	
<=10 VAC :<=8 VDC	
25HZ AC; 40 Hz DC	
10ms/10ms	
<15% (Sr)	
<1.0% (Sr)	
IP67	
-25°C - +70°C	
<10% (Sr)	
YES	
-	
-	
RFI>3V/m / EFT>1KV / ESD>4KV (contact)	
IEC 60947-5-2,Part 7.4.1 / IEC 60947-5-2,Part 7.4.2	
PBT	

FCM1-3010U-A3L2	11	FCM2-3015U-A3L2
FCM1-3010U-B3L2	12	FCM2-3015U-B3L2

5.8⌀3x0.5(6.8⌀5x0.5)	
Approx.247 g	Approx.237 g

AC/DC INDUCTIVE PLASTIC HOUSING PROXIMITY SWITCH

M 12		M 12		M 12	
●	○	●	○	●	○
2 mm	4 mm	2 mm	4 mm	2 mm	4 mm
PBT RESIN		PBT RESIN		PBT RESIN	
●		●		●	

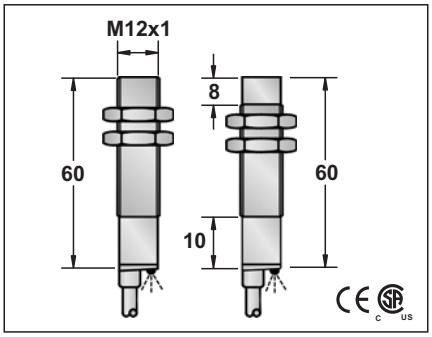

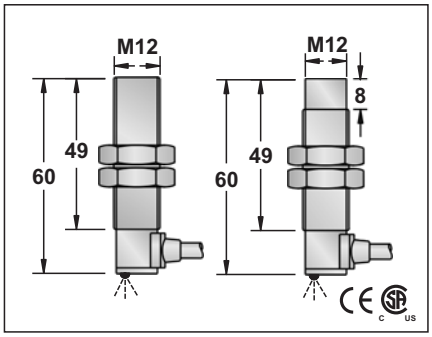

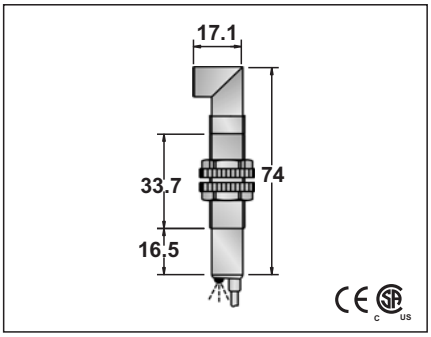

20-250 VAC, 50-60 Hz; 20-250 VDC			20-250 VAC, 50-60 Hz; 20-250 VDC			20-250 VAC, 50-60 Hz; 20-250 VDC		
DC RIPPLE <10%			DC RIPPLE <10%			DC RIPPLE <10%		
<2.5mA			<2.5mA			<2.5mA		
100mA			100mA			100mA		
<2.5mA			<2.5mA			<2.5mA		
2.2A for 20ms			2.2A for 20ms			2.2A for 20ms		
5mA			5mA			5mA		
<=10 VAC :<=8 VDC			<=10 VAC :<=8 VDC			<=10 VAC :<=8 VDC		
25HZ AC; 40 Hz DC			25HZ AC; 40 Hz DC			25HZ AC; 40 Hz DC		
10ms/10ms			10ms/10ms			10ms/10ms		
<15%(Sr)			<15% (Sr)			<15% (Sr)		
<1.0% (Sr)			<1.0% (Sr)			<1.0% (Sr)		
IP67			IP67			IP67		
-25°C - +70°C			-25°C - +70°C			-25°C - +70°C		
<10% (Sr)			<10% (Sr)			<10% (Sr)		
YES (DC 20~30V only)			YES (DC 20~30V only)			YES (DC 20~30V only)		
-			-			-		
-			-			-		
RFI>3V/m / EFT>1KV / ESD>4KV (contact)			RFI>3V/m / EFT>1KV / ESD>4KV (contact)			RFI>3V/m / EFT>1KV / ESD>4KV (contact)		
IEC 60947-5-2,Part 7.4.1 / IEC 60947-5-2,Part 7.4.2			IEC 60947-5-2,Part 7.4.1 / IEC 60947-5-2,Part 7.4.2			IEC 60947-5-2,Part 7.4.1 / IEC 60947-5-2,Part 7.4.2		
POM		PBT	POM		PBT	PBT		
FCP1-1202U-A2L2	9	FCP2-1204U-A2L2	FCP1-1202U-A2L2Y	9	FCP2-1204U-A2L2Y	FCP1-1202U-A2L2Z	9	FCP2-1204U-A2L2Z
FCP1-1202U-B2L2	10	FCP2-1204U-B2L2	FCP1-1202U-B2L2Y	10	FCP2-1204U-B2L2Y	FCP1-1202U-B2L2Z	10	FCP2-1204U-B2L2Z
4ϕ2x0.34			4ϕ2x0.34			4ϕ2x0.34		
Approx.68 g			Approx.68 g			Approx.68 g		

AC/DC INDUCTIVE PLASTIC HOUSING PROXIMITY SWITCH

M 18			M 18			M 18		
●	○		●	○		●	○	
5 mm	8 mm		5 mm	8 mm		5 mm	8 mm	
PBT RESIN			PBT RESIN			PBT RESIN		
●			●			●		
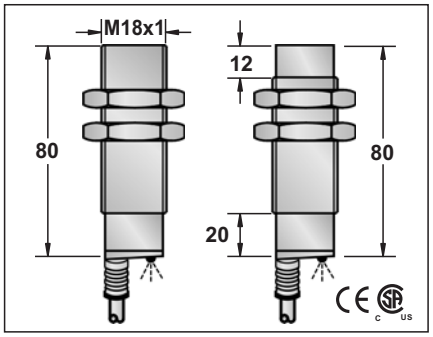			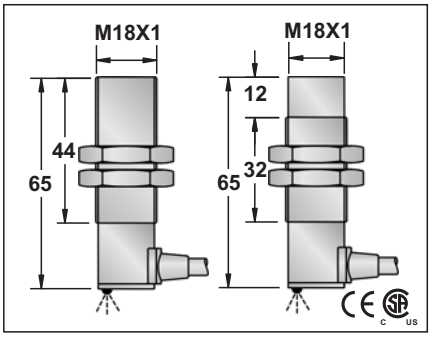			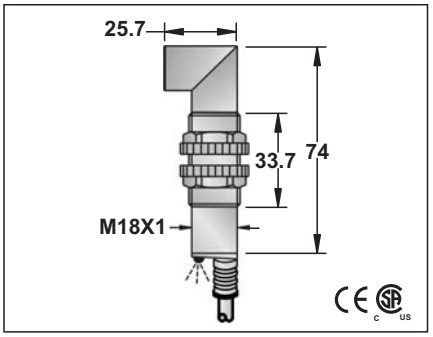		
20-250 VAC, 50-60 Hz; 20-250 VDC			20-250 VAC, 50-60 Hz; 20-250 VDC			20-250 VAC, 50-60 Hz; 20-250 VDC		
DC RIPPLE <10%			DC RIPPLE <10%			DC RIPPLE <10%		
<2.5mA			<2.5mA			<2.5mA		
200mA			200mA			200mA		
<2.5mA			<2.5mA			<2.5mA		
2.2A for 20ms			2.2A for 20ms			2.2A for 20ms		
5mA			5mA			5mA		
<=10 VAC :<=8 VDC			<=10 VAC :<=8 VDC			<=10 VAC :<=8 VDC		
25HZ AC; 40 Hz DC			25HZ AC; 40 Hz DC			25HZ AC; 40 Hz DC		
10ms/10ms			10ms/10ms			10ms/10ms		
<15% (Sr)			<15% (Sr)			<15% (Sr)		
<1.0% (Sr)			<1.0% (Sr)			<1.0% (Sr)		
IP67			IP67			IP67		
-25 °C - +70 °C			-25 °C - +70 °C			-25 °C - +70 °C		
<10% (Sr)			<10% (Sr)			<10% (Sr)		
YES			YES			YES		
-			-			-		
-			-			-		
RFI>3V/m / EFT>1KV / ESD>4KV (contact)			RFI>3V/m / EFT>1KV / ESD>4KV (contact)			RFI>3V/m / EFT>1KV / ESD>4KV (contact)		
IEC 60947-5-2,Part 7.4.1 / IEC 60947-5-2,Part 7.4.2			IEC 60947-5-2,Part 7.4.1 / IEC 60947-5-2,Part 7.4.2			IEC 60947-5-2,Part 7.4.1 / IEC 60947-5-2,Part 7.4.2		
PBT			PBT			PBT		
FCP1-1805U-A2L2	9	FCP2-1808U-A2L2	FCP1-1805U-A2L2Y	9	FCP2-1808U-A2L2Y	FCP1-1805U-A2L2Z	11	FCP2-1808U-A2L2Z
FCP1-1805U-B2L2	10	FCP2-1808U-B2L2	FCP1-1805U-B2L2Y	10	FCP2-1808U-B2L2Y	FCP1-1805U-B2L2Z	12	FCP2-1808U-B2L2Z
5.0φ44x0.1			5.0φ44x0.1			5.0φ44x0.1		
Approx.124 g			Approx.124 g			Approx.124 g		

AC/DC INDUCTIVE PLASTIC HOUSING PROXIMITY SWITCH

ϕ20		M 30		ϕ34	
●	○	●	○	●	○
5 mm	8 mm	10 mm	15 mm	15 mm	20 mm
PBT RESIN		PBT RESIN		PBT RESIN	
●		●		●	

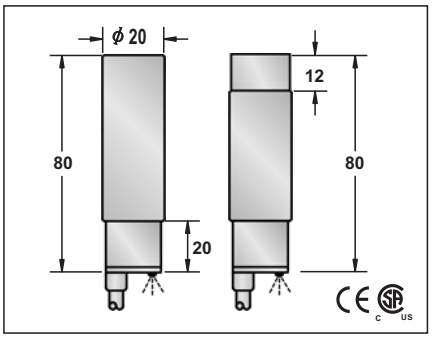

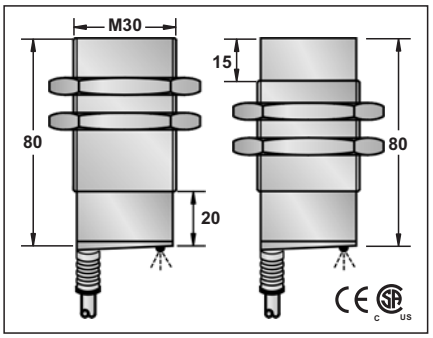

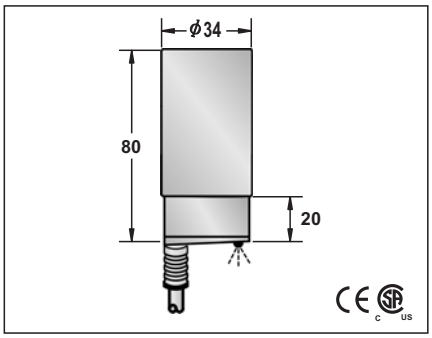

20-250 VAC, 50-60 Hz; 20-250 VDC			20-250 VAC, 50-60 Hz; 20-250 VDC			20-250 VAC, 50-60 Hz; 20-250 VDC		
DC RIPPLE <10%			DC RIPPLE <10%			DC RIPPLE <10%		
<2.5mA			<2.5mA			<2.5mA		
200mA			200mA			200mA		
<2.5mA			<2.5mA			<2.5mA		
2.2A for 20ms			2.2A for 20ms			2.2A for 20ms		
5mA			5mA			5mA		
<=10 VAC :<=8 VDC			<=10 VAC :<=8 VDC			<=10 VAC :<=8 VDC		
25HZ AC; 40 Hz DC			25HZ AC; 40 Hz DC			25HZ AC; 40 Hz DC		
10ms/10ms			10ms/10ms			10ms/10ms		
<15% (Sr)			<15% (Sr)			<15% (Sr)		
<1.0% (Sr)			<1.0% (Sr)			<1.0% (Sr)		
IP67			IP67			IP67		
-25°C - +70°C			-25°C - +70°C			-25°C - +70°C		
<10% (Sr)			<10% (Sr)			<10% (Sr)		
YES			YES			YES		
-			-			-		
-			-			-		
RFI>3V/m / EFT>1KV / ESD>4KV (contact)			RFI>3V/m / EFT>1KV / ESD>4KV (contact)			RFI>3V/m / EFT>1KV / ESD>4KV (contact)		
IEC 60947-5-2,Part 7.4.1 / IEC 60947-5-2,Part 7.4.2			IEC 60947-5-2,Part 7.4.1 / IEC 60947-5-2,Part 7.4.2			IEC 60947-5-2,Part 7.4.1 / IEC 60947-5-2,Part 7.4.2		
PBT			PBT			PBT		
FCP1-D2005U-A2L2	9	FCP2-D2008U-A2L2	FCP1-3010U-A2L2	9	FCP2-3015U-A2L2	FCP1-D3415U-A2L2	9	FCP2-D3420U-A2L2
FCP1-D2005U-B2L2	10	FCP2-D2008U-B2L2	FCP1-3010U-B2L2	10	FCP2-3015U-B2L2	FCP1-D3415U-B2L2	10	FCP2-D3420U-B2L2
4ϕ2x0.34			4ϕ2x0.34			4ϕ2x0.34		
Approx.68 g			Approx.68 g			Approx.124 g		

AC/DC INDUCTIVE PROXIMITY SWITCH CONNECTOR TYPE

ϕ11		M 12		M 18	
●	○	●	○	●	○
2 mm	4 mm	2 mm	4 mm	5 mm	8 mm
stainless steel or nickel plated brass		stainless steel or nickel plated brass		stainless steel or nickel plated brass	
●		●		●	

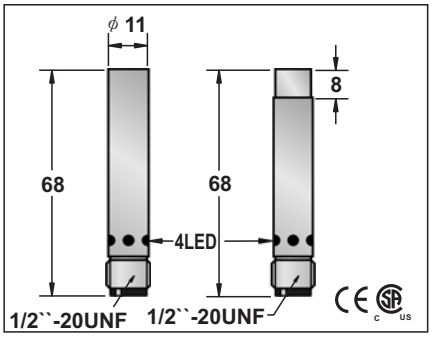

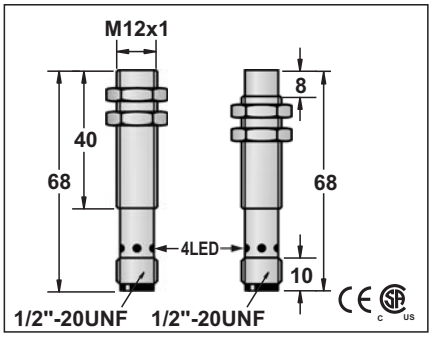

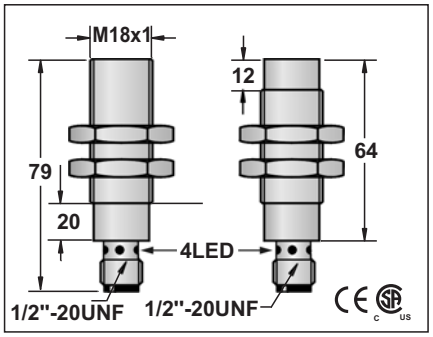

20-250 VAC, 50-60 Hz; 20-250 VDC		
DC RIPPLE <10%		
<2.5mA		
100mA		
<2.5mA		
2.2A for 20ms		
5mA		
<=10 VAC :<=8 VDC		
25HZ AC; 40 Hz DC		
10ms/10ms		
<15%(Sr)		
<1.0% (Sr)		
IP67		
-25°C - +70°C		
<10% (Sr)		
YES (DC 20~30V only)		
-		
-		
RFI>3V/m / EFT>1KV / ESD>4KV (contact)		
IEC 60947-5-2,Part 7.4.1 / IEC 60947-5-2,Part 7.4.2		
PBT		
FCM1-D1102U-AUL3	56	FCM2-D1104U-AUL3
FCM1-D1102U-BUL3	56	FCM2-D1104U-BUL3
Approx.30 g		Approx.29 g

20-250 VAC, 50-60 Hz; 20-250 VDC		
DC RIPPLE <10%		
<2.5mA		
100mA		
<2.5mA		
2.2A for 20ms		
5mA		
<=10 VAC :<=8 VDC		
25HZ AC; 40 Hz DC		
10ms/10ms		
<15%(Sr)		
<1.0% (Sr)		
IP67		
-25°C - +70°C		
<10% (Sr)		
YES (DC 20~30V only)		
-		
-		
RFI>3V/m / EFT>1KV / ESD>4KV (contact)		
IEC 60947-5-2,Part 7.4.1 / IEC 60947-5-2,Part 7.4.2		
POM		PBT
FCM1-1202U-AUL3	56	FCM2-1204U-AUL3
FCM1-1202U-BUL3	56	FCM2-1204U-BUL3
Approx.31 g		Approx.30 g

20-250 VAC, 50-60 Hz; 20-250 VDC		
DC RIPPLE <10%		
<2.5mA		
100mA		
<2.5mA		
2.2A for 20ms		
5mA		
<=10 VAC :<=8 VDC		
25HZ AC; 40 Hz DC		
10ms/10ms		
<15%(Sr)		
<1.0% (Sr)		
IP67		
-25°C - +70°C		
<10% (Sr)		
YES (DC 20~30V only)		
-		
-		
RFI>3V/m / EFT>1KV / ESD>4KV (contact)		
IEC 60947-5-2,Part 7.4.1 / IEC 60947-5-2,Part 7.4.2		
PBT		
FCM1-1805U-AUL3	56	FCM2-1808U-AUL3
FCM1-1805U-BUL3	56	FCM2-1808U-BUL3
Approx.69 g		Approx.68 g

AC/DC INDUCTIVE PROXIMITY SWITCH CONNECTOR TYPE

M 18		M 18		M 18	
●	○	●	○	●	○
5 mm	8 mm	5 mm	8 mm	5 mm	8 mm
stainless steel or nickel plated brass		stainless steel or nickel plated brass		stainless steel or nickel plated brass	
●		●		●	

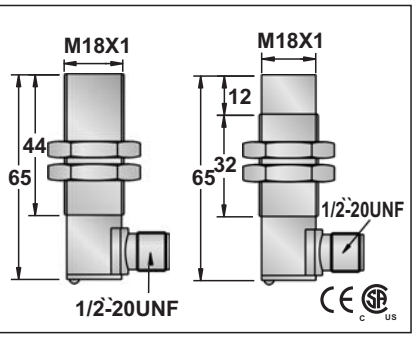

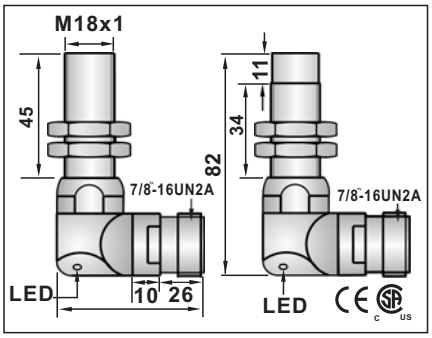

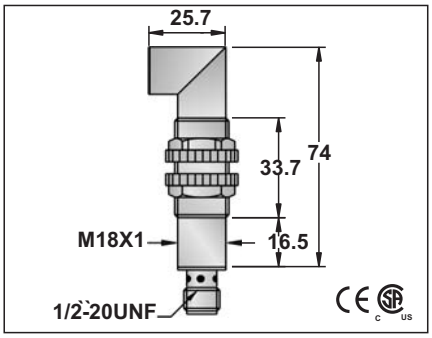

20-250 VAC, 50-60 Hz; 20-250 VDC			20-250 VAC, 50-60 Hz; 20-250 VDC			20-250 VAC, 50-60 Hz; 20-250 VDC		
DC RIPPLE <10%			DC RIPPLE <10%			DC RIPPLE <10%		
<2.5mA			<2.5mA			<2.5mA		
200mA			200mA			200mA		
<2.5mA			<2.5mA			<2.5mA		
2.2A for 20ms			2.2A for 20ms			2.2A for 20ms		
5mA			5mA			5mA		
<=10 VAC :<=8 VDC			<=10 VAC :<=8 VDC			<=10 VAC :<=8 VDC		
25HZ AC; 40 Hz DC			25HZ AC; 40 Hz DC			25HZ AC; 40 Hz DC		
10ms/10ms			10ms/10ms			10ms/10ms		
<15% (Sr)			<15% (Sr)			<15% (Sr)		
<1.0% (Sr)			<1.0% (Sr)			<1.0% (Sr)		
IP67			IP67			IP67		
-25°C - +70°C			-25°C - +70°C			-25°C - +70°C		
<10% (Sr)			<10% (Sr)			<10% (Sr)		
YES			YES			YES		
-			-			-		
-			-			-		
RFI>3V/m / EFT>1KV / ESD>4KV (contact)			RFI>3V/m / EFT>1KV / ESD>4KV (contact)			RFI>3V/m / EFT>1KV / ESD>4KV (contact)		
IEC 60947-5-2,Part 7.4.1 / IEC 60947-5-2,Part 7.4.2			IEC 60947-5-2,Part 7.4.1 / IEC 60947-5-2,Part 7.4.2			IEC 60947-5-2,Part 7.4.1 / IEC 60947-5-2,Part 7.4.2		
PBT			PBT			PBT		
FCM1-1805U-AUL3Y	56	FCM2-1808U-AUL3Y	FCM1-1805U-AZL3Y	56	FCM2-1808U-AZL3Y	FCM1-1805U-AUL3Z	56	FCM2-1808U-AUL3Z
FCM1-1805U-BUL3Y	56	FCM2-1808U-BUL3Y	FCM1-1805U-BZL3Y	56	FCM2-1808U-BZL3Y	FCM1-1805U-BUL3Z	56	FCM2-1808U-BUL3Z
			FCM*-*****-*Z*** Z=7/8-16UN2A U=1/2-20UNF					
Approx.69 g		Approx.68 g	Approx.251 g		Approx.283 g	Approx.69 g		Approx.68 g

AC/DC INDUCTIVE PROXIMITY SWITCH CONNECTOR TYPE

M 30		
●	○	
10 mm	15 mm	
stainless steel or nickel plated brass		
●		
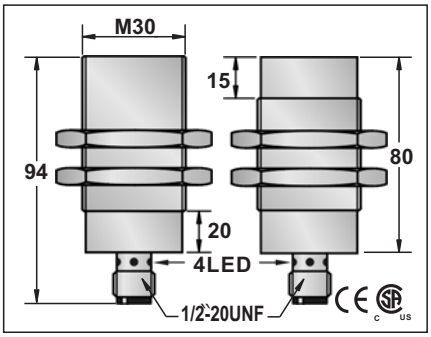		
20-250 VAC, 50-60 Hz; 20-250 VDC		
DC RIPPLE <10%		
<2.5mA		
200mA		
<2.5mA		
2.2A for 20ms		
5mA		
<=10 VAC :<=8 VDC		
25HZ AC; 40 Hz DC		
10ms/10ms		
<15% (Sr)		
<1.0% (Sr)		
IP67		
-25°C - +70°C		
<10% (Sr)		
YES		
-		
-		
RFI>3V/m / EFT>1KV / ESD>4KV (contact)		
IEC 60947-5-2,Part 7.4.1 / IEC 60947-5-2,Part 7.4.2		
PBT		
FCM1-3010U-AUL3	56	FCM2-3015U-AUL3
FCM1-3010U-BUL3	56	FCM2-3015U-BUL3
Approx.147 g	Approx.137 g	

M 30		
●	○	
10 mm	15 mm	
stainless steel or nickel plated brass		
●		
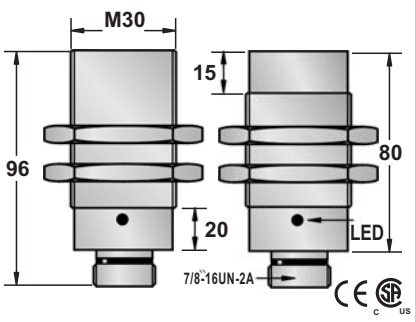		
20-250 VAC, 50-60 Hz; 20-250 VDC		
DC RIPPLE <10%		
<2.5mA		
200mA		
<2.5mA		
2.2A for 20ms		
5mA		
<=10 VAC :<=8 VDC		
25HZ AC; 40 Hz DC		
10ms/10ms		
<15% (Sr)		
<1.0% (Sr)		
IP67		
-25°C - +70°C		
<10% (Sr)		
YES		
-		
-		
RFI>3V/m / EFT>1KV / ESD>4KV (contact)		
IEC 60947-5-2,Part 7.4.1 / IEC 60947-5-2,Part 7.4.2		
PBT		
FCM1-3010U-AZL3	66	FCM2-3015U-AZL3
FCM1-3010U-BZL3	66	FCM2-3015U-BZL3
Approx.187 g	Approx.179 g	

M 30		
●	○	
10 mm	15 mm	
stainless steel or nickel plated brass		
●		
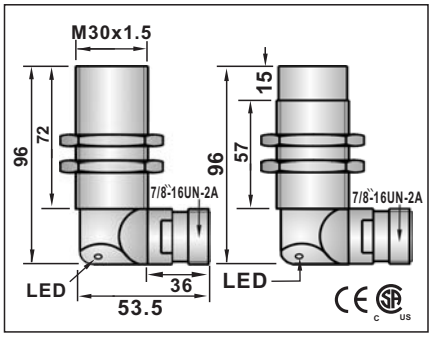		
20-250 VAC, 50-60 Hz; 20-250 VDC		
DC RIPPLE <10%		
<2.5mA		
200mA		
<2.5mA		
2.2A for 20ms		
5mA		
<=10 VAC :<=8 VDC		
25HZ AC; 40 Hz DC		
10ms/10ms		
<15% (Sr)		
<1.0% (Sr)		
IP67		
-25°C - +70°C		
<10% (Sr)		
YES		
-		
-		
RFI>3V/m / EFT>1KV / ESD>4KV (contact)		
IEC 60947-5-2,Part 7.4.1 / IEC 60947-5-2,Part 7.4.2		
PBT		
FCM1-3010U-AZL3Y	66	FCM2-3015U-AZL3Y
FCM1-3010U-BZL3Y	66	FCM2-3015U-BZL3Y
FCM*-*****-*Z*** Z=7/8"-16UN2A U=1/2"-20UNF		
Approx.311 g	Approx.356 g	

AC/DC INDUCTIVE PLASTIC HOUSING PROXIMITY SWITCH CONNECTOR TYPE

M 12		M 18		M 18	
●	○	●	○	●	○
2 mm	4 mm	5 mm	8 mm	5 mm	8 mm
PBT RESIN		PBT RESIN		PBT RESIN	
●		●		●	

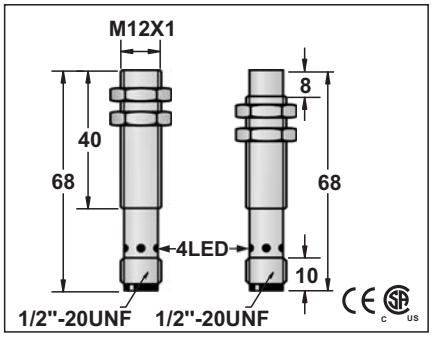

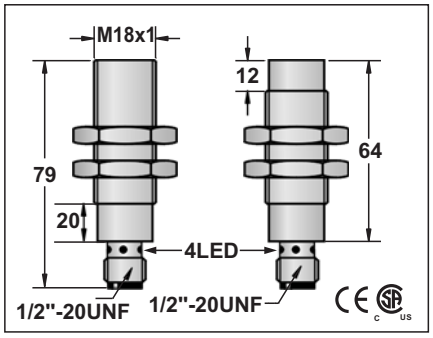

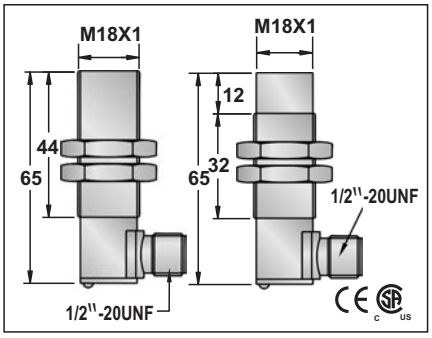

20-250 VAC, 50-60 Hz; 20-250 VDC			20-250 VAC, 50-60 Hz; 20-250 VDC			20-250 VAC, 50-60 Hz; 20-250 VDC		
DC RIPPLE <10%			DC RIPPLE <10%			DC RIPPLE <10%		
<2.5mA			<2.5mA			<2.5mA		
100mA			200mA			200mA		
<2.5mA			<2.5mA			<2.5mA		
2.2A for 20ms			2.2A for 20ms			2.2A for 20ms		
5mA			5mA			5mA		
<=10 VAC :<=8 VDC			<=10 VAC :<=8 VDC			<=10 VAC :<=8 VDC		
25HZ AC; 40 Hz DC			25HZ AC; 40 Hz DC			25HZ AC; 40 Hz DC		
10ms/10ms			10ms/10ms			10ms/10ms		
<15%(Sr)			<15% (Sr)			<15% (Sr)		
<1.0% (Sr)			<1.0% (Sr)			<1.0% (Sr)		
IP67			IP67			IP67		
-25°C - +70°C			-25°C - +70°C			-25°C - +70°C		
<10% (Sr)			<10% (Sr)			<10% (Sr)		
YES (DC 20~30V only)			YES			YES		
-			-			-		
-			-			-		
RFI>3V/m / EFT>1KV / ESD>4KV (contact)			RFI>3V/m / EFT>1KV / ESD>4KV (contact)			RFI>3V/m / EFT>1KV / ESD>4KV (contact)		
IEC 60947-5-2,Part 7.4.1 / IEC 60947-5-2,Part 7.4.2			IEC 60947-5-2,Part 7.4.1 / IEC 60947-5-2,Part 7.4.2			IEC 60947-5-2,Part 7.4.1 / IEC 60947-5-2,Part 7.4.2		
PBT			PBT			PBT		
FCP1-1202U-AUL3	58	FCP2-1204U-AUL3	FCP1-1805U-AUL3	58	FCP2-1808U-AUL3	FCP1-1805U-AUL3Y	58	FCP2-1808U-AUL3Y
FCP1-1202U-BUL3	58	FCP2-1204U-BUL3	FCP1-1805U-BUL3	58	FCP2-1808U-BUL3	FCP1-1805U-BUL3Y	58	FCP2-1808U-BUL3Y
Approx.14 g			Approx.80 g			Approx.80 g		

Note:
Coming Soon : Part numbers with underline

AC/DC INDUCTIVE PLASTIC HOUSING PROXIMITY SWITCH CONNECTOR TYPE

M 18		ϕ20		M 30	
●	○	●	○	●	○
5 mm	8 mm	8 mm	12 mm	10 mm	15 mm
PBT RESIN		PBT RESIN		PBT RESIN	
●		●		●	

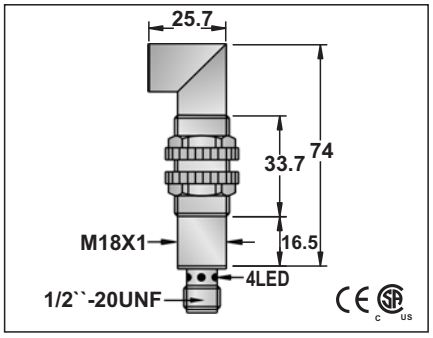

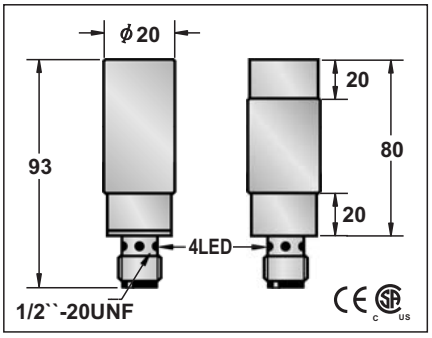

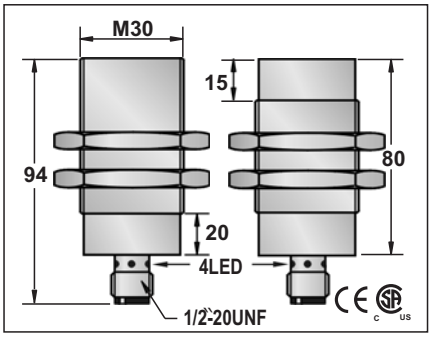

20-250 VAC, 50-60 Hz; 20-250 VDC		
DC RIPPLE <10%		
<2.5mA		
200mA		
<2.5mA		
2.2A for 20ms		
5mA		
<=10 VAC :<=8 VDC		
25HZ AC; 40 Hz DC		
10ms/10ms		
<15% (Sr)		
<1.0% (Sr)		
IP67		
-25°C - +70°C		
<10% (Sr)		
YES		
-		
-		
RFI>3V/m / EFT>1KV / ESD>4KV (contact)		
IEC 60947-5-2,Part 7.4.1 / IEC 60947-5-2,Part 7.4.2		
PBT		
FCP1-1805U-AUL3Z	58	FCP2-1808U-AUL3Z
FCP1-1805U-BUL3Z	58	FCP2-1808U-BUL3Z
Approx.14 g		

20-250 VAC, 50-60 Hz; 20-250 VDC		
DC RIPPLE <10%		
<2.5mA		
200mA		
<2.5mA		
2.2A for 20ms		
5mA		
<=10 VAC :<=8 VDC		
25HZ AC; 40 Hz DC		
10ms/10ms		
<15% (Sr)		
<1.0% (Sr)		
IP67		
-25°C - +70°C		
<10% (Sr)		
YES		
-		
-		
RFI>3V/m / EFT>1KV / ESD>4KV (contact)		
IEC 60947-5-2,Part 7.4.1 / IEC 60947-5-2,Part 7.4.2		
PBT		
FCP1-D2008U-AUL3	58	FCP2-D2012U-AUL3
FCP1-D2008U-BUL3	58	FCP2-D2012U-BUL3
Approx.90 g		

20-250 VAC, 50-60 Hz; 20-250 VDC		
DC RIPPLE <10%		
<2.5mA		
200mA		
<2.5mA		
2.2A for 20ms		
5mA		
<=10 VAC :<=8 VDC		
25HZ AC; 40 Hz DC		
10ms/10ms		
<15% (Sr)		
<1.0% (Sr)		
IP67		
-25°C - +70°C		
<10% (Sr)		
YES		
-		
-		
RFI>3V/m / EFT>1KV / ESD>4KV (contact)		
IEC 60947-5-2,Part 7.4.1 / IEC 60947-5-2,Part 7.4.2		
PBT		
FCP1-3010U-AUL3	58	FCP2-3015U-AUL3
FCP1-3010U-BUL3	58	FCP2-3015U-BUL3
Approx.120 g		

Note:
Coming Soon : Part numbers with underline

AC/DC INDUCTIVE PLASTIC HOUSING PROXIMITY SWITCH CONNECTOR TYPE

M 30		ϕ34		ϕ34	
●	○	●	○	●	○
10 mm	15 mm	15 mm	20 mm	15 mm	20 mm
PBT RESIN		PBT RESIN		PBT RESIN	
●		●		●	

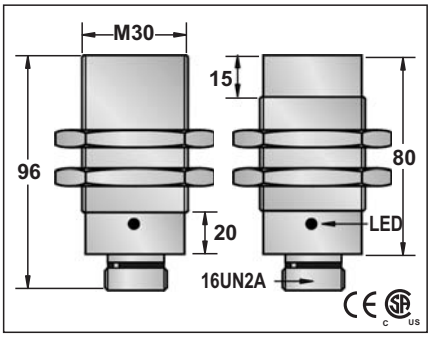

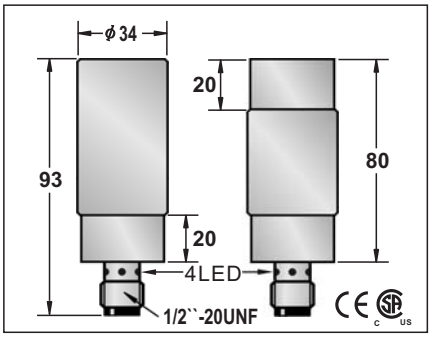

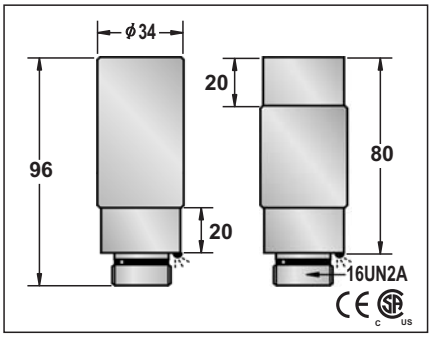

M 30	ϕ34	ϕ34
20-250 VAC, 50-60 Hz; 20-250 VDC	20-250 VAC, 50-60 Hz; 20-250 VDC	20-250 VAC, 50-60 Hz; 20-250 VDC
DC RIPPLE <10%	DC RIPPLE <10%	DC RIPPLE <10%
<2.5mA	<2.5mA	<2.5mA
200mA	200mA	200mA
<2.5mA	<2.5mA	<2.5mA
2.2A for 20ms	2.2A for 20ms	2.2A for 20ms
5mA	5mA	5mA
<=10 VAC :<=8 VDC	<=10 VAC :<=8 VDC	<=10 VAC :<=8 VDC
25HZ AC; 40 Hz DC	25HZ AC; 40 Hz DC	25HZ AC; 40 Hz DC
10ms/10ms	10ms/10ms	10ms/10ms
<15% (Sr)	<15% (Sr)	<15% (Sr)
<1.0% (Sr)	<1.0% (Sr)	<1.0% (Sr)
IP67	IP67	IP67
-25°C - +70°C	-25°C - +70°C	-25°C - +70°C
<10% (Sr)	<10% (Sr)	<10% (Sr)
YES	YES	YES
-	-	-
-	-	-
RFI>3V/m / EFT>1KV / ESD>4KV (contact)	RFI>3V/m / EFT>1KV / ESD>4KV (contact)	RFI>3V/m / EFT>1KV / ESD>4KV (contact)
IEC 60947-5-2,Part 7.4.1 / IEC 60947-5-2,Part 7.4.2	IEC 60947-5-2,Part 7.4.1 / IEC 60947-5-2,Part 7.4.2	IEC 60947-5-2,Part 7.4.1 / IEC 60947-5-2,Part 7.4.2
PBT	PBT	PBT

FCP1-3010U-AZL2	66	FCP2-3015U-AZL2	FCP1-D3415U-AUL3	58	FCP2-D3420U-AUL3	FCP1-D3415U-AZL2	66	FCP2-D3420U-AZL2
FCP1-3010U-BZL2	66	FCP2-3015U-BZL2	FCP1-D3415U-BUL3	58	FCP2-D3420U-BUL3	FCP1-D3415U-BZL2	66	FCP2-D3420U-BZL2

M 30	ϕ34	ϕ34
Approx.120 g	Approx.162 g	Approx.162 g

Note:
Coming Soon : Part numbers with underline