AC/DC METAL FACE INDUCTIVE PROXIMITY SWITCH (Teflon Coating)

M18			M 18			M 18		
●	○		●	○		●		
5 mm	8 mm		5 mm	8mm		5 mm		
Stainless steel			Stainless steel			Stainless steel		
●			●			●		
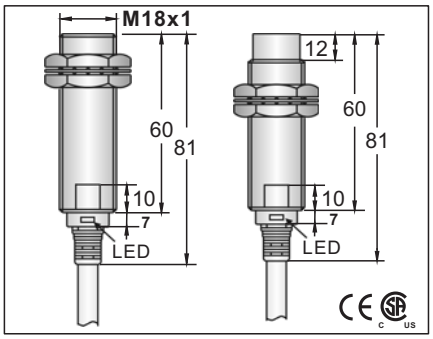			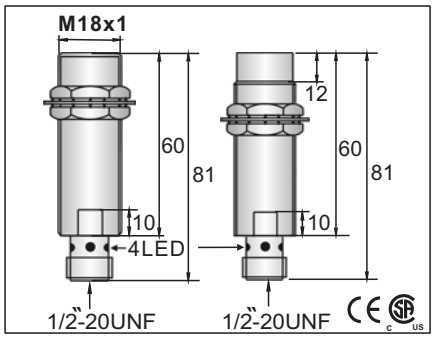			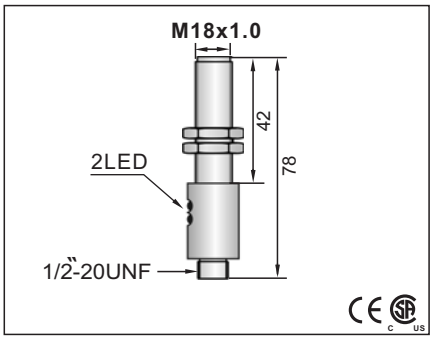		
20-250 VAC, 50-60 Hz; 20-250 VDC			20-250 VAC, 50-60 Hz; 20-250 VDC			20-250 VAC, 50-60 Hz; 20-250 VDC		
DC RIPPLE <10%			DC RIPPLE <10%			DC RIPPLE <10%		
<2.5mA			<2.5mA			<2.5mA		
200mA			200mA			200mA		
<2.5mA			<2.5mA			<2.5mA		
2.2A for 20ms			2.2A for 20ms			2.2A for 20ms		
5mA			5mA			5mA		
<=10 VAC :<=8 VDC			<=10 VAC :<=8 VDC			<=10 VAC :<=8 VDC		
25HZ AC; 40 Hz DC			25HZ AC; 40 Hz DC			25HZ AC; 40 Hz DC		
10ms/10ms			10ms/10ms			10ms/10ms		
<15% (Sr)			<15% (Sr)			<15% (Sr)		
<1.0% (Sr)			<1.0% (Sr)			<1.0% (Sr)		
IP67			IP67			IP67		
-25°C - +70°C			-25°C - +70°C			-25°C - +70°C		
<10% (Sr)			<10% (Sr)			<10% (Sr)		
YES			YES			YES		
-			-			-		
160MT			160MT			160MT		
RFI>8V/m / EFT>1KV / ESD>8KV (contact)			RFI>8V/m / EFT>1KV / ESD>8KV (contact)			RFI>8V/m / EFT>1KV / ESD>8KV (contact)		
IEC 60947-5-2,Part 7.4.1 / IEC 60947-5-2,Part 7.4.2			IEC 60947-5-2,Part 7.4.1 / IEC 60947-5-2,Part 7.4.2			IEC 60947-5-2,Part 7.4.1 / IEC 60947-5-2,Part 7.4.2		
Stainless steel			Stainless steel			Stainless steel		
FCS1-1805U-A3L2-W	11	FCS2-1808U-A3L2-W	FCS1-1805U-AUL3-W	56	FCS2-1808U-AUL3-W	FCS1-1805U-AUL3/2-W	56	
FCS1-1805U-B3L2-W	12	FCS2-1808U-B3L2-W	FCS1-1805U-BUL3-W	56	FCS2-1808U-BUL3-W	FCS1-1805U-BUL3/2-W	56	
5.0 ϕ 44x0.1								
Approx.153 g	Approx.144 g		Approx.94 g	Approx.91 g		Approx.91 g		

Note:
Coming Soon : Part numbers with underline

AC/DC METAL FACE INDUCTIVE PROXIMITY SWITCH (Teflon Coating)

M 18		M 18		M 18	
●	○	●	○	●	○
5 mm	8 mm	5 mm	8 mm	5 mm	8 mm
Stainless steel		Stainless steel		Stainless steel	
●		●		●	

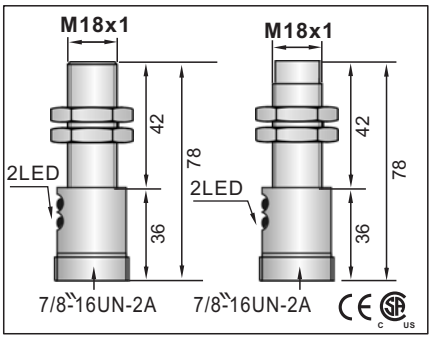

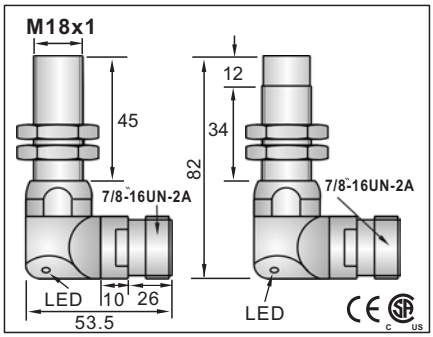

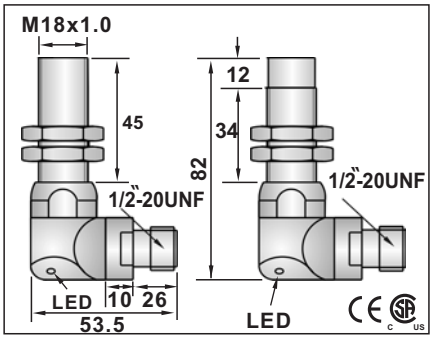

20-250 VAC, 50-60 Hz; 20-250 VDC		
DC RIPPLE <10%		
<2.5mA		
200mA		
<2.5mA		
2.2A for 20ms		
5mA		
<=10 VAC :<=8 VDC		
25HZ AC; 40 Hz DC		
10ms/10ms		
<15% (Sr)		
<1.0% (Sr)		
IP67		
-25°C - +70°C		
<10% (Sr)		
YES		
-		
160MT		
RFI>8V/m / EFT>1KV / ESD>8KV (contact)		
IEC 60947-5-2,Part 7.4.1 / IEC 60947-5-2,Part 7.4.2		
Stainless steel		
FCS1-1805U-AZL3Y/2-W	65	FCS2-1808U-AZL3Y/2-W
FCS1-1805U-BZL3Y/2-W	65	FCS2-1808U-BZL3Y/2-W
Approx.94 g		Approx.91 g

20-250 VAC, 50-60 Hz; 20-250 VDC		
DC RIPPLE <10%		
<2.5mA		
200mA		
<2.5mA		
2.2A for 20ms		
5mA		
<=10 VAC :<=8 VDC		
25HZ AC; 40 Hz DC		
10ms/10ms		
<15% (Sr)		
<1.0% (Sr)		
IP67		
-25°C - +70°C		
<10% (Sr)		
YES		
-		
160MT		
RFI>8V/m / EFT>1KV / ESD>8KV (contact)		
IEC 60947-5-2,Part 7.4.1 / IEC 60947-5-2,Part 7.4.2		
Stainless steel		
FCS1-1805U-AZL3Y-W	65	FCS2-1808U-AZL3Y-W
FCS1-1805U-BZL3Y-W	65	FCS2-1808U-BZL3Y-W
Approx.251 g		Approx.283 g

20-250 VAC, 50-60 Hz; 20-250 VDC		
DC RIPPLE <10%		
<2.5mA		
200mA		
<2.5mA		
2.2A for 20ms		
5mA		
<=10 VAC :<=8 VDC		
25HZ AC; 40 Hz DC		
10ms/10ms		
<15% (Sr)		
<1.0% (Sr)		
IP67		
-25°C - +70°C		
<10% (Sr)		
YES		
-		
160MT		
RFI>8V/m / EFT>1KV / ESD>8KV (contact)		
IEC 60947-5-2,Part 7.4.1 / IEC 60947-5-2,Part 7.4.2		
Stainless steel		
FCS1-1805U-AUL3Y-W	56	FCS2-1808U-AUL3Y-W
FCS1-1805U-BUL3Y-W	56	FCS2-1808U-BUL3Y-W
Approx.251 g		Approx.283 g

Note:
Coming Soon : Part numbers with underline

AC/DC METAL FACE INDUCTIVE PROXIMITY SWITCH (Teflon Coating)

M 18	M 18	M 30	
●	●	●	○
5 mm	5 mm	10 mm	15 mm
Stainless steel	Stainless steel	Stainless steel	
●	●	●	

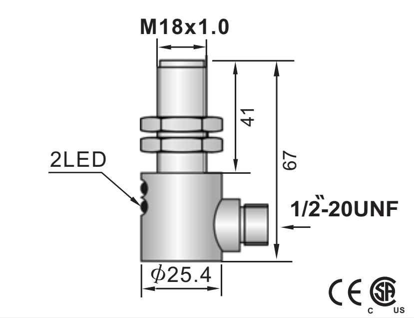

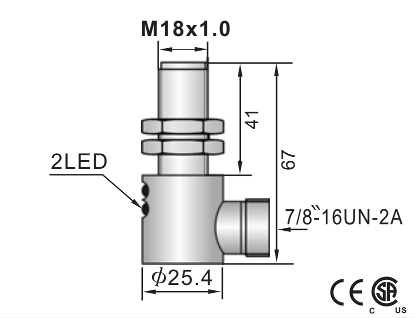

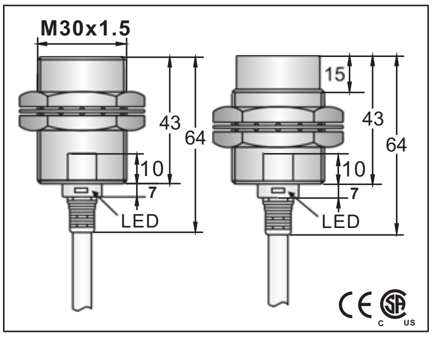

M 18	M 18	M 30
20-250 VAC, 50-60 Hz; 20-250 VDC	20-250 VAC, 50-60 Hz; 20-250 VDC	20-250 VAC, 50-60 Hz; 20-250 VDC
DC RIPPLE <10%	DC RIPPLE <10%	DC RIPPLE <10%
<2.5mA	<2.5mA	<2.5mA
200mA	200mA	200mA
<2.5mA	<2.5mA	<2.5mA
2.2A for 20ms	2.2A for 20ms	2.2A for 20ms
5mA	5mA	5mA
<=10 VAC :<=8 VDC	<=10 VAC :<=8 VDC	<=10 VAC :<=8 VDC
25HZ AC; 40 Hz DC	25HZ AC; 40 Hz DC	25HZ AC; 40 Hz DC
10ms/10ms	10ms/10ms	10ms/10ms
<15% (Sr)	<15% (Sr)	<15% (Sr)
<1.0% (Sr)	<1.0% (Sr)	<1.0% (Sr)
IP67	IP67	IP67
-25°C - +70°C	-25°C - +70°C	-25°C - +70°C
<10% (Sr)	<10% (Sr)	<10% (Sr)
YES	YES	YES
-	-	-
160MT	160MT	160MT
RFI>8V/m / EFT>1KV / ESD>8KV (contact)	RFI>8V/m / EFT>1KV / ESD>8KV (contact)	RFI>8V/m / EFT>1KV / ESD>8KV (contact)
IEC 60947-5-2,Part 7.4.1 / IEC 60947-5-2,Part 7.4.2	IEC 60947-5-2,Part 7.4.1 / IEC 60947-5-2,Part 7.4.2	IEC 60947-5-2,Part 7.4.1 / IEC 60947-5-2,Part 7.4.2
Stainless steel	Stainless steel	Stainless steel

M 18		M 18		M 30		
FCS1-1805U-AUL3Y/2-W	56	FCS1-1805U-AZL3Y/2-W	65	FCS1-3010U-A3S2-W	11	FCS2-3015U-A3S2-W
FCS1-1805U-BUL3Y/2-W	56	FCS1-1805U-BZL3Y/2-W	65	FCS1-3010U-B3S2-W	12	FCS2-3015U-B3S2-W
				5.8ϕ3x0.5		
Approx.94 g		Approx.98 g		Approx.217 g		Approx.207 g

Note:
Coming Soon : Part numbers with underline

AC/DC METAL FACE INDUCTIVE PROXIMITY SWITCH (Teflon Coating)

M 30		
●	○	
10 mm	15 mm	
Stainless steel		
●		
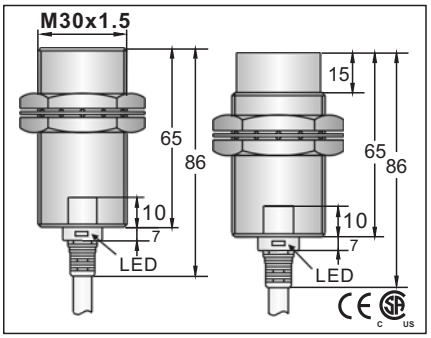		
20-250 VAC, 50-60 Hz; 20-250 VDC		
DC RIPPLE <10%		
<2.5mA		
200mA		
<2.5mA		
2.2A for 20ms		
5mA		
<=10 VAC :<=8 VDC		
25HZ AC; 40 Hz DC		
10ms/10ms		
<15% (Sr)		
<1.0% (Sr)		
IP67		
-25°C - +70°C		
<10% (Sr)		
YES		
-		
160MT		
RFI>8V/m / EFT>1KV / ESD>8KV (contact)		
IEC 60947-5-2,Part 7.4.1 / IEC 60947-5-2,Part 7.4.2		
Stainless steel		
~~FCS1-3010U-A3L2-W~~	11	~~FCS2-3015U-A3L2-W~~
~~FCS1-3010U-B3L2-W~~	12	~~FCS2-3015U-B3L2-W~~
5.8ϕ3x0.5		
Approx.227 g	Approx.217 g	

M 30		
●	○	
10 mm	15 mm	
Stainless steel		
●		
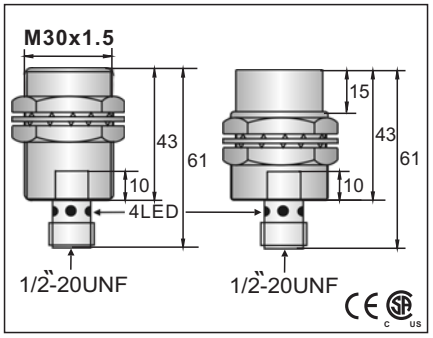		
20-250 VAC, 50-60 Hz; 20-250 VDC		
DC RIPPLE <10%		
<2.5mA		
200mA		
<2.5mA		
2.2A for 20ms		
5mA		
<=10 VAC :<=8 VDC		
25HZ AC; 40 Hz DC		
10ms/10ms		
<15% (Sr)		
<1.0% (Sr)		
IP67		
-25°C - +70°C		
<10% (Sr)		
YES		
-		
160MT		
RFI>8V/m / EFT>1KV / ESD>8KV (contact)		
IEC 60947-5-2,Part 7.4.1 / IEC 60947-5-2,Part 7.4.2		
Stainless steel		
FCS1-3010U-AUS3-W	56	FCS2-3015U-AUS3-W
FCS1-3010U-BUS3-W	56	FCS2-3015U-BUS3-W
Approx.111 g	Approx.121 g	

M 30		
●	○	
10 mm	15 mm	
Stainless steel		
●		
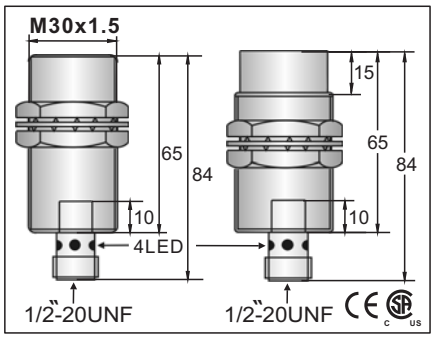		
20-250 VAC, 50-60 Hz; 20-250 VDC		
DC RIPPLE <10%		
<2.5mA		
200mA		
<2.5mA		
2.2A for 20ms		
5mA		
<=10 VAC :<=8 VDC		
25HZ AC; 40 Hz DC		
10ms/10ms		
<15% (Sr)		
<1.0% (Sr)		
IP67		
-25°C - +70°C		
<10% (Sr)		
YES		
-		
160MT		
RFI>8V/m / EFT>1KV / ESD>8KV (contact)		
IEC 60947-5-2,Part 7.4.1 / IEC 60947-5-2,Part 7.4.2		
Stainless steel		
FCS1-3010U-AUL3-W	56	FCS2-3015U-AUL3-W
FCS1-3010U-BUL3-W	56	FCS2-3015U-BUL3-W
Approx.187 g	Approx.179 g	

Note:

Coming Soon : Part numbers with underline

In Preparation: Part numbers with a line through the middle

AC/DC METAL FACE INDUCTIVE PROXIMITY SWITCH (Teflon Coating)

M 30		
●	○	
10 mm	15 mm	
Stainless steel		
●		
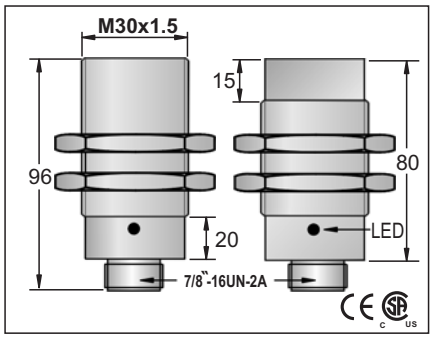		
20-250 VAC, 50-60 Hz; 20-250 VDC		
DC RIPPLE <10%		
<2.5mA		
200mA		
<2.5mA		
2.2A for 20ms		
5mA		
<=10 VAC :<=8 VDC		
25HZ AC; 40 Hz DC		
10ms/10ms		
<15% (Sr)		
<1.0% (Sr)		
IP67		
-25°C - +70°C		
<10% (Sr)		
YES		
-		
160MT		
RFI>8V/m / EFT>1KV / ESD>8KV (contact)		
IEC 60947-5-2,Part 7.4.1 / IEC 60947-5-2,Part 7.4.2		
Stainless steel		
~~FCS1-3010U-AZL3-W~~	65	~~FCS2-3015U-AZL3-W~~
~~FCS1-3010U-BZL3-W~~	65	~~FCS2-3015U-BZL3-W~~
Approx.187 g	Approx.179 g	

M 30		
●	○	
10 mm	15 mm	
Stainless steel		
●		
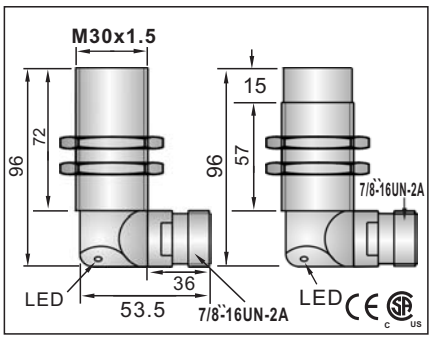		
20-250 VAC, 50-60 Hz; 20-250 VDC		
DC RIPPLE <10%		
<2.5mA		
200mA		
<2.5mA		
2.2A for 20ms		
5mA		
<=10 VAC :<=8 VDC		
25HZ AC; 40 Hz DC		
10ms/10ms		
<15% (Sr)		
<1.0% (Sr)		
IP67		
-25°C - +70°C		
<10% (Sr)		
YES		
-		
160MT		
RFI>8V/m / EFT>1KV / ESD>8KV (contact)		
IEC 60947-5-2,Part 7.4.1 / IEC 60947-5-2,Part 7.4.2		
Stainless steel		
~~FCS1-3010U-AZL3Y-W~~	65	~~FCS2-3015U-AZL3Y-W~~
~~FCS1-3010U-BZL3Y-W~~	65	~~FCS2-3015U-BZL3Y-W~~
Approx.311 g	Approx.356 g	

M 30		
●	○	
10 mm	15 mm	
Stainless steel		
●		
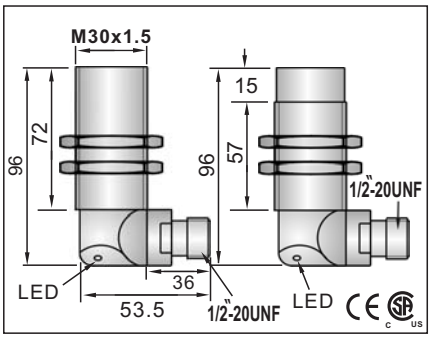		
20-250 VAC, 50-60 Hz; 20-250 VDC		
DC RIPPLE <10%		
<2.5mA		
200mA		
<2.5mA		
2.2A for 20ms		
5mA		
<=10 VAC :<=8 VDC		
25HZ AC; 40 Hz DC		
10ms/10ms		
<15% (Sr)		
<1.0% (Sr)		
IP67		
-25°C - +70°C		
<10% (Sr)		
YES		
-		
160MT		
RFI>8V/m / EFT>1KV / ESD>8KV (contact)		
IEC 60947-5-2,Part 7.4.1 / IEC 60947-5-2,Part 7.4.2		
Stainless steel		
~~FCS1-3010U-AUL3Y-W~~	56	~~FCS2-3015U-AUL3Y-W~~
~~FCS1-3010U-BUL3Y-W~~	56	~~FCS2-3015U-BUL3Y-W~~
Approx.311 g	Approx.356 g	

Note:
In Preparation: Part numbers with a line through the middle

AC/DC METAL FACE INDUCTIVE PROXIMITY SWITCH (Teflon Coating)

M 30	M 30
●	●
10 mm	10 mm
Stainless steel	Stainless steel
●	●

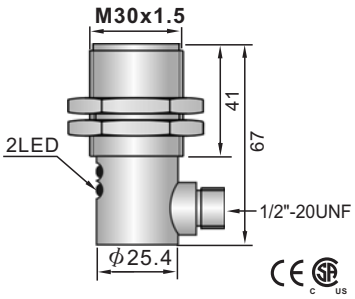

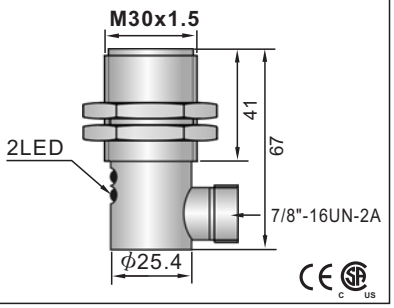

M 30	M 30
20-250 VAC, 50-60 Hz; 20-250 VDC	20-250 VAC, 50-60 Hz; 20-250 VDC
DC RIPPLE <10%	DC RIPPLE <10%
<2.5mA	<2.5mA
200mA	200mA
<2.5mA	<2.5mA
2.2A for 20ms	2.2A for 20ms
5mA	5mA
<=10 VAC :<=8 VDC	<=10 VAC :<=8 VDC
25HZ AC; 40 Hz DC	25HZ AC; 40 Hz DC
10ms/10ms	10ms/10ms
<15% (Sr)	<15% (Sr)
<1.0% (Sr)	<1.0% (Sr)
IP67	IP67
-25°C - +70°C	-25°C - +70°C
<10% (Sr)	<10% (Sr)
YES	YES
-	-
160MT	160MT
RFI>8V/m / EFT>1KV / ESD>8KV (contact)	RFI>8V/m / EFT>1KV / ESD>8KV (contact)
IEC 60947-5-2,Part 7.4.1 / IEC 60947-5-2,Part 7.4.2	IEC 60947-5-2,Part 7.4.1 / IEC 60947-5-2,Part 7.4.2
Stainless steel	Stainless steel

~~FCS1-3010U-AUL3Y/2-W~~	56	~~FCS1-3010U-AZL3Y/2-W~~	65
~~FCS1-3010U-BUL3Y/2-W~~	56	~~FCS1-3010U-BZL3Y/2-W~~	65

Approx.250 g	Approx.250 g

Note:
In Preparation: Part numbers with a line through the middle