AC/DC INDUCTIVE PROXIMITY SWITCH 5 WAY ROTATABLE SENSING

Q40	Q40	Q40
●	○	○
15 mm	20 mm	30 mm
PBT RESIN	PBT RESIN	PBT RESIN
●	●	●
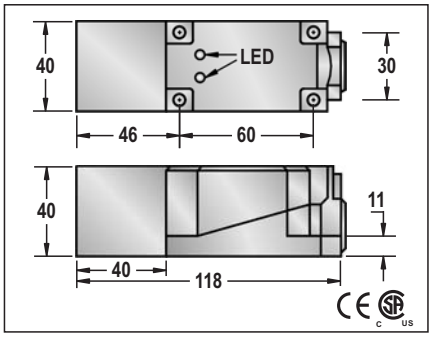	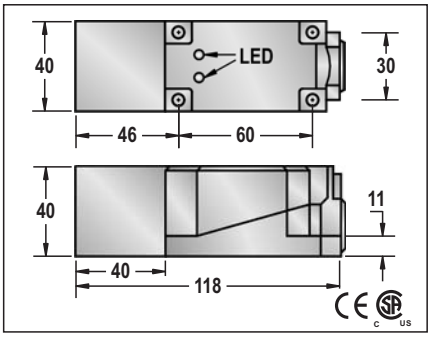	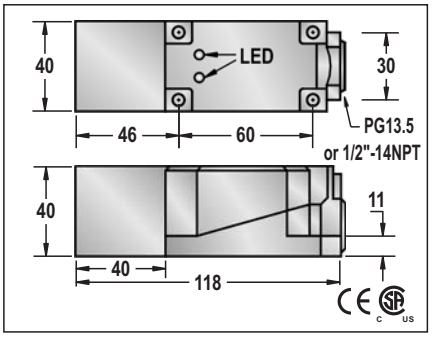
20-250 VAC, 50-60 Hz; 20-250 VDC	20-250 VAC, 50-60 Hz; 20-250 VDC	20-250 VAC, 50-60 Hz; 20-250 VDC
DC RIPPLE <10%	DC RIPPLE <10%	DC RIPPLE <10%
<2.5mA	<2.5mA	<2.5mA
200mA	200mA	200mA
<2.5mA	<2.5mA	<2.5mA
2.2A for 20ms	2.2A for 20ms	2.2A for 20ms
5mA	5mA	5mA
<=10 VAC :<=8 VDC	<=10 VAC :<=8 VDC	<=10 VAC :<=8 VDC
25HZ AC; 40 Hz DC	25HZ AC; 40 Hz DC	25HZ AC; 40 Hz DC
10ms/10ms	10ms/10ms	10ms/10ms
<15% (Sr)	<15% (Sr)	<15% (Sr)
<1.0% (Sr)	<1.0% (Sr)	<1.0% (Sr)
IP67	IP67	IP67
-25°C - +70°C	-25°C - +70°C	-25°C - +70°C
<10% (Sr)	<10% (Sr)	<10% (Sr)
YES	YES	YES
-	-	-
-	-	-
RFI>3V/m / EFT>1KV / ESD>4KV (contact)	RFI>3V/m / EFT>1KV / ESD>4KV (contact)	RFI>3V/m / EFT>1KV / ESD>4KV (contact)
IEC 60947-5-2,Part 7.4.1 / IEC 60947-5-2,Part 7.4.2	IEC 60947-5-2,Part 7.4.1 / IEC 60947-5-2,Part 7.4.2	IEC 60947-5-2,Part 7.4.1 / IEC 60947-5-2,Part 7.4.2
PBT	PBT	PBT
FQP1-4015U-A2L 9	FQP2-4020U-A2L 9	FQP2-4030U-A2L 9
FQP1-4015U-B2L 10	FQP2-4020U-B2L 10	FQP2-4030U-B2L 10
Approx.250 g	Approx.250 g	Approx.250 g

AC/DC INDUCTIVE PROXIMITY SWITCH 5 WAY ROTATABLE SENSING

Q40	Q40	Q40
●	○	○
15 mm	20 mm	30 mm
PBT RESIN	PBT RESIN	PBT RESIN
●	●	●
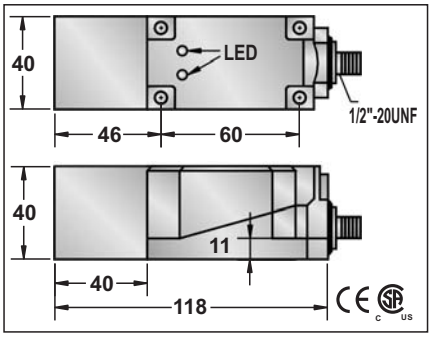	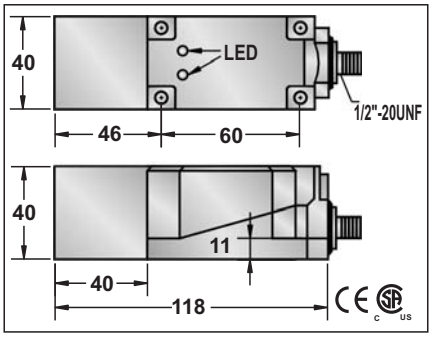	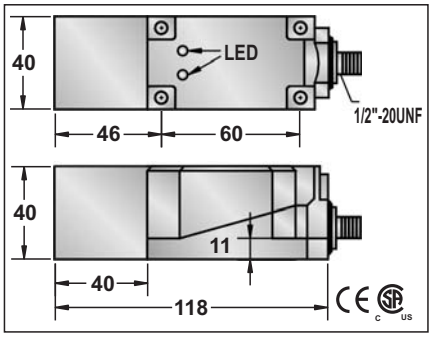
20-250 VAC, 50-60 Hz; 20-250 VDC	20-250 VAC, 50-60 Hz; 20-250 VDC	20-250 VAC, 50-60 Hz; 20-250 VDC
DC RIPPLE <10%	DC RIPPLE <10%	DC RIPPLE <10%
<2.5mA	<2.5mA	<2.5mA
200mA	200mA	200mA
<2.5mA	<2.5mA	<2.5mA
2.2A for 20ms	2.2A for 20ms	2.2A for 20ms
5mA	5mA	5mA
<=10 VAC :<=8 VDC	<=10 VAC :<=8 VDC	<=10 VAC :<=8 VDC
25HZ AC; 40 Hz DC	25HZ AC; 40 Hz DC	25HZ AC; 40 Hz DC
10ms/10ms	10ms/10ms	10ms/10ms
<15% (Sr)	<15% (Sr)	<15% (Sr)
<1.0% (Sr)	<1.0% (Sr)	<1.0% (Sr)
IP67	IP67	IP67
-25 °C - +70 °C	-25 °C - +70 °C	-25 °C - +70 °C
<10% (Sr)	<10% (Sr)	<10% (Sr)
YES	YES	YES
-	-	-
-	-	-
RFI>3V/m / EFT>1KV / ESD>4KV (contact)	RFI>3V/m / EFT>1KV / ESD>4KV (contact)	RFI>3V/m / EFT>1KV / ESD>4KV (contact)
IEC 60947-5-2,Part 7.4.1 / IEC 60947-5-2,Part 7.4.2	IEC 60947-5-2,Part 7.4.1 / IEC 60947-5-2,Part 7.4.2	IEC 60947-5-2,Part 7.4.1 / IEC 60947-5-2,Part 7.4.2
PBT	PBT	PBT
FQP1-4015U-AUL3 58	FQP2-4020U-AUL3 58	FQP2-4030U-AUL3 58
FQP1-4015U-BUL3 58	FQP2-4020U-BUL3 58	FQP2-4030U-BUL3 58
Approx.250 g	Approx.250 g	Approx.250 g

AC/DC INDUCTIVE PROXIMITY SWITCH 5 WAY ROTATABLE SENSING

Q40	Q40	Q40
●	○	○
15 mm	20 mm	30 mm
PBT RESIN	PBT RESIN	PBT RESIN
●	●	●
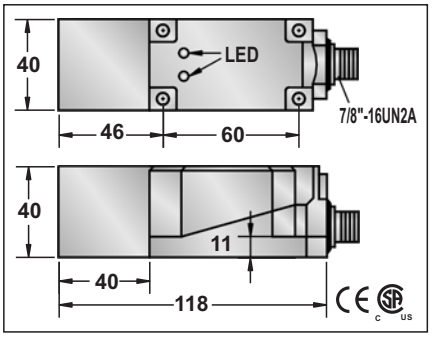	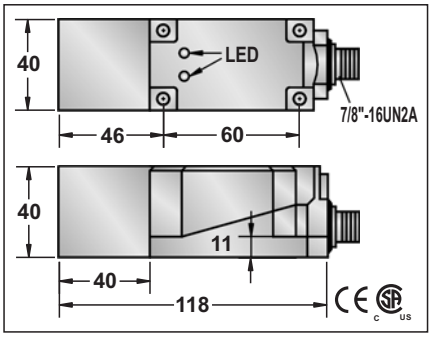	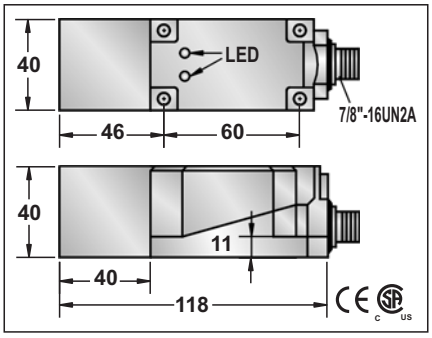
20-250 VAC, 50-60 Hz; 20-250 VDC	20-250 VAC, 50-60 Hz; 20-250 VDC	20-250 VAC, 50-60 Hz; 20-250 VDC
DC RIPPLE <10%	DC RIPPLE <10%	DC RIPPLE <10%
<2.5mA	<2.5mA	<2.5mA
200mA	200mA	200mA
<2.5mA	<2.5mA	<2.5mA
2.2A for 20ms	2.2A for 20ms	2.2A for 20ms
5mA	5mA	5mA
<=10 VAC :<=8 VDC	<=10 VAC :<=8 VDC	<=10 VAC :<=8 VDC
25HZ AC; 40 Hz DC	25HZ AC; 40 Hz DC	25HZ AC; 40 Hz DC
10ms/10ms	10ms/10ms	10ms/10ms
<15% (Sr)	<15% (Sr)	<15% (Sr)
<1.0% (Sr)	<1.0% (Sr)	<1.0% (Sr)
IP67	IP67	IP67
-25°C - +70°C	-25°C - +70°C	-25°C - +70°C
<10% (Sr)	<10% (Sr)	<10% (Sr)
YES	YES	YES
-	-	-
-	-	-
RFI>3V/m / EFT>1KV / ESD>4KV (contact)	RFI>3V/m / EFT>1KV / ESD>4KV (contact)	RFI>3V/m / EFT>1KV / ESD>4KV (contact)
IEC 60947-5-2,Part 7.4.1 / IEC 60947-5-2,Part 7.4.2	IEC 60947-5-2,Part 7.4.1 / IEC 60947-5-2,Part 7.4.2	IEC 60947-5-2,Part 7.4.1 / IEC 60947-5-2,Part 7.4.2
PBT	PBT	PBT
FQP1-4015U-AZL2 66	FQP2-4020U-AZL2 66	FQP2-4030U-AZL2 66
FQP1-4015U-BZL2 66	FQP2-4020U-BZL2 66	FQP2-4030U-BZL2 66
Approx.250 g	Approx.250 g	Approx.250 g

AC/DC INDUCTIVE PROXIMITY SWITCH 5 WAY ROTATABLE SENSING

Q50	Q50	Q40s
○	○	●
50 mm	50 mm	15 mm
PBT RESIN	PBT RESIN	PBT RESIN
●	●	●
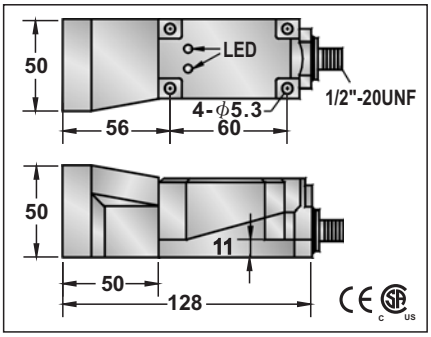	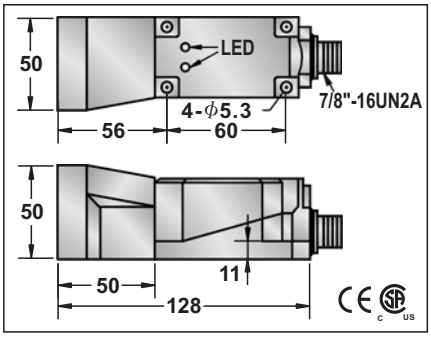	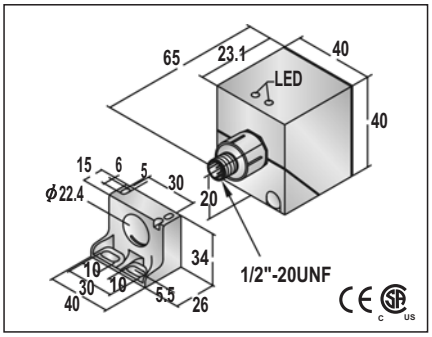
20-250 VAC, 50-60 Hz; 20-250 VDC	20-250 VAC, 50-60 Hz; 20-250 VDC	20-250 VAC, 50-60 Hz; 20-250 VDC
DC RIPPLE <10%	DC RIPPLE <10%	DC RIPPLE <10%
<2.5mA	<2.5mA	<2.5mA
200mA	200mA	200mA
<2.5mA	<2.5mA	<2.5mA
2.2A for 20ms	2.2A for 20ms	2.2A for 20ms
5mA	5mA	5mA
<=10 VAC :<=8 VDC	<=10 VAC :<=8 VDC	<=10 VAC :<=8 VDC
25HZ AC; 40 Hz DC	25HZ AC; 40 Hz DC	25HZ AC; 40 Hz DC
10ms/10ms	10ms/10ms	10ms/10ms
<15% (Sr)	<15% (Sr)	<15% (Sr)
<1.0% (Sr)	<1.0% (Sr)	<1.0% (Sr)
IP67	IP67	IP67
-25°C - +70°C	-25°C - +70°C	-25°C - +70°C
<10% (Sr)	<10% (Sr)	<10% (Sr)
YES	YES	YES
-	-	-
-	-	-
RFI>3V/m / EFT>1KV / ESD>4KV (contact)	RFI>3V/m / EFT>1KV / ESD>4KV (contact)	RFI>3V/m / EFT>1KV / ESD>4KV (contact)
IEC 60947-5-2,Part 7.4.1 / IEC 60947-5-2,Part 7.4.2	IEC 60947-5-2,Part 7.4.1 / IEC 60947-5-2,Part 7.4.2	IEC 60947-5-2,Part 7.4.1 / IEC 60947-5-2,Part 7.4.2
PBT	PBT	PBT
FQP2-5040U-AUL3 58	FQP2-5040U-AZL2 66	FQP1-4015U-AUS3 58
FQP2-5040U-BUL3 58	FQP2-5040U-BZL2 66	FQP1-4015U-BUS3 58
Approx.250 g	Approx.250 g	Approx.250 g

AC/DC INDUCTIVE PROXIMITY SWITCH 5 WAY ROTATABLE SENSING

Q40s		
●		
15 mm		
PBT RESIN		
●		
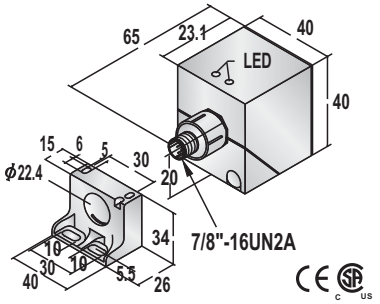		
20-250 VAC, 50-60 Hz; 20-250 VDC		
DC RIPPLE <10%		
<2.5mA		
200mA		
<2.5mA		
2.2A for 20ms		
5mA		
<=10 VAC :<=8 VDC		
25HZ AC; 40 Hz DC		
10ms/10ms		
<15% (Sr)		
<1.0% (Sr)		
IP67		
-25°C - +70°C		
<10% (Sr)		
YES		
-		
-		
RFI>3V/m / EFT>1KV / ESD>4KV (contact)		
IEC 60947-5-2,Part 7.4.1 / IEC 60947-5-2,Part 7.4.2		
PBT		
FQP1-4015U-AZS2	62	
FQP1-4015U-BZS2	62	
Approx.250 g		