AC METAL FACE EXTENDED SENSING DISTANCE PROXIMITY SWITCH

M 12			M 12			M 18		
●	○		●	○		●	○	
4 mm	8 mm		4 mm	8 mm		8 mm	16 mm	
Stainless steel			Stainless steel			Stainless steel		
●			●			●		
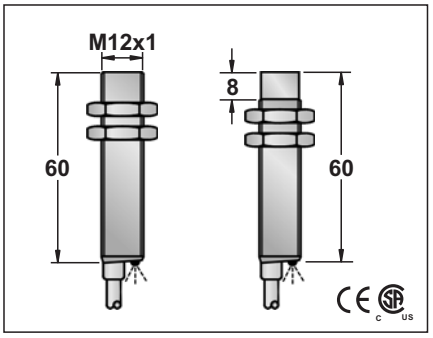			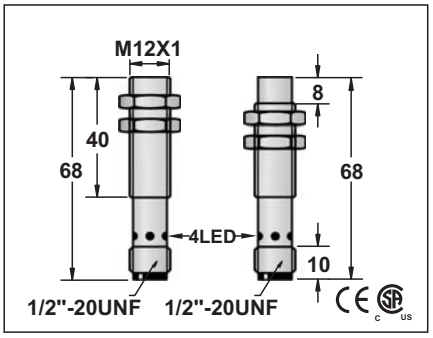			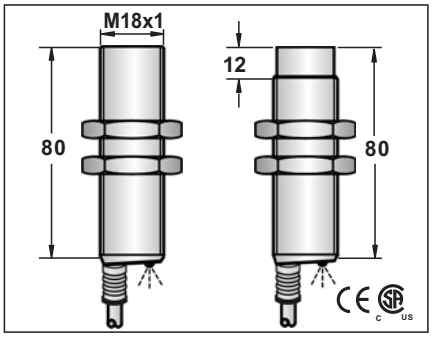		
20-250VAC			20-250VAC			20-250VAC		
-			-			-		
<1.8mA			<1.8mA			<1.8mA		
400mA			400mA			400mA		
<1.8mA			<1.8mA			<1.8mA		
5A(20ms)			5A(20ms)			5A(20ms)		
5mA			5mA			5mA		
<8V AC at 40mA			<8V AC at 40mA			<8V AC at 40mA		
<25HZ			<25HZ			<25HZ		
10ms/10ms			10ms/10ms			10ms/10ms		
<15%(Sr)			<15%(Sr)			<15%(Sr)		
<1.0%(Sr)			<1.0%(Sr)			<1.0%(Sr)		
IP67			IP67			IP67		
-25°C - +70°C			-25°C - +70°C			-25°C - +70°C		
<10%(Sr)			<10%(Sr)			<10%(Sr)		
NO			NO			NO		
–			–			–		
–			–			–		
RFI>3V/m / EFT>1KV / ESD>4KV (contact)			RFI>3V/m / EFT>1KV / ESD>4KV (contact)			RFI>3V/m / EFT>1KV / ESD>4KV (contact)		
IEC 60947-5-2,Part 7.4.1 / IEC 60947-5-2,Part 7.4.2			IEC 60947-5-2,Part 7.4.1 / IEC 60947-5-2,Part 7.4.2			IEC 60947-5-2,Part 7.4.1 / IEC 60947-5-2,Part 7.4.2		
Stainless steel			Stainless steel			Stainless steel		
ECS1-1204A-A3L2	11	ECS2-1208A-A3L2	ECS1-1204A-AUL3	56	ECS2-1208A-AUL3	ECS1-1808A-A3L2	11	ECS2-1816A-A3L2
ECS1-1204A-B3L2	12	ECS2-1208A-B3L2	ECS1-1204A-BUL3	56	ECS2-1208A-BUL3	ECS1-1808A-B3L2	12	ECS2-1816A-B3L2
4φ3x0.15						5.0φ44x0.1		
Approx.77 g		Approx.76 g	Approx.31 g		Approx.30 g	Approx.161 g		Approx.160 g

Note:
Coming Soon : Part numbers with underline

AC METAL FACE EXTENDED SENSING DISTANCE PROXIMITY SWITCH

M 18			M 18			M 18		
●	○		●	○		●	○	
8 mm	16 mm		8 mm	16 mm		8 mm	16 mm	
stainless steel			stainless steel			stainless steel		
●			●			●		
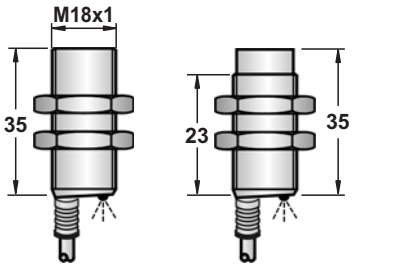			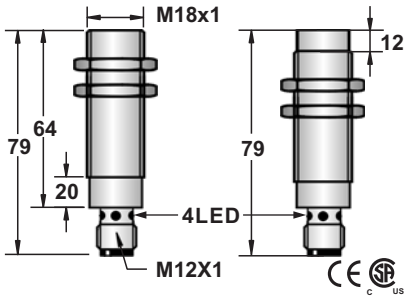			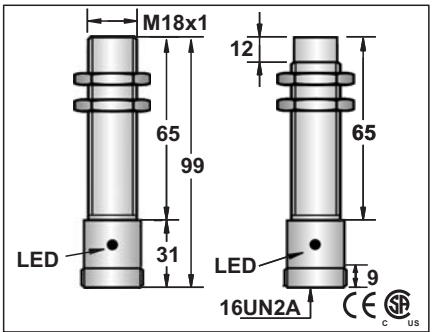		
20-250VAC			20-250VAC			20-250VAC		
-			-			-		
<1.8mA			<1.8mA			<1.8mA		
400mA			400mA			400mA		
<1.8mA			<1.8mA			<1.8mA		
5A(20ms)			5A(20ms)			5A(20ms)		
5mA			5mA			5mA		
<8V AC at 40mA			<8V AC at 40mA			<8V AC at 40mA		
<25Hz			<25Hz			<25Hz		
10ms/10ms			10ms/10ms			10ms/10ms		
<15%(Sr)			<15%(Sr)			<15%(Sr)		
<1.0%(Sr)			<1.0%(Sr)			<1.0%(Sr)		
IP67			IP67			IP67		
-25 °C - +70 °C			-25 °C - +70 °C			-25 °C - +70 °C		
<10%(Sr)			<10%(Sr)			<10%(Sr)		
NO			NO			NO		
–			–			–		
–			–			–		
RFI>3V/m / EFT>1KV / ESD>4KV (contact)			RFI>3V/m / EFT>1KV / ESD>4KV (contact)			RFI>3V/m / EFT>1KV / ESD>4KV (contact)		
IEC 60947-5-2,Part 7.4.1 / IEC 60947-5-2,Part 7.4.2			IEC 60947-5-2,Part 7.4.1 / IEC 60947-5-2,Part 7.4.2			IEC 60947-5-2,Part 7.4.1 / IEC 60947-5-2,Part 7.4.2		
Stainless steel			Stainless steel			Stainless steel		
ECS1-1808A-A3S2	11	ECS2-1816A-A3S2	ECS1-1808A-AUL3	56	ECS2-1816A-AUL3	ECS1-1808A-AZL3	65	ECS2-1816A-AZL3
ECS1-1808A-B3S2	12	ECS2-1816A-B3S2	ECS1-1808A-BUL3	56	ECS2-1816A-BUL3	ECS1-1808A-BZL3	65	ECS2-1816A-BZL3
5.0∅44x0.1								
Approx.156 g		Approx.146 g	Approx.69 g		Approx.68 g	Approx.94 g		Approx.91 g

Note:
Coming Soon : Part numbers with underline

AC METAL FACE EXTENDED SENSING DISTANCE PROXIMITY SWITCH

M 30		
●	○	
16 mm	25 mm	
stainless steel		
●		
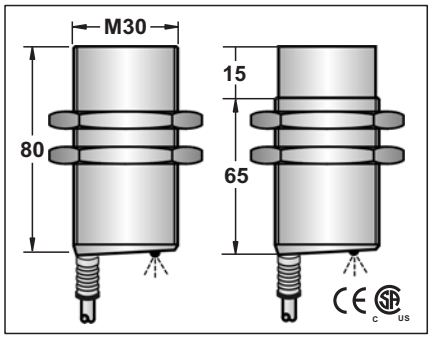		
20-250VAC		
-		
<1.8mA		
400mA		
<1.8mA		
5A(20ms)		
5mA		
<8V AC at 40mA		
<25Hz		
10ms/10ms		
<15%(Sr)		
<1.0%(Sr)		
IP67		
-25°C - +70°C		
<10%(Sr)		
NO		
–		
–		
RFI>3V/m / EFT>1KV / ESD>4KV (contact)		
IEC 60947-5-2,Part 7.4.1 / IEC 60947-5-2,Part 7.4.2		
Stainless steel		
~~ECS1-3016A-A3L2~~	11	~~ECS2-3025A-A3L2~~
~~ECS1-3016A-B3L2~~	12	~~ECS2-3025A-B3L2~~
5.8∅3x0.5		
Approx.247 g	Approx.237 g	

M 30		
●	○	
16 mm	25 mm	
stainless steel		
●		
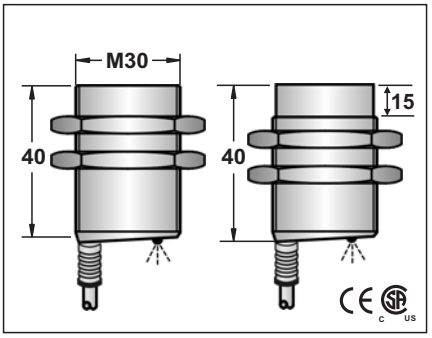		
20-250VAC		
-		
<1.8mA		
400mA		
<1.8mA		
5A(20ms)		
5mA		
<8V AC at 40mA		
<25Hz		
10ms/10ms		
<15%(Sr)		
<1.0%(Sr)		
IP67		
-25°C - +70°C		
<10%(Sr)		
NO		
–		
–		
RFI>3V/m / EFT>1KV / ESD>4KV (contact)		
IEC 60947-5-2,Part 7.4.1 / IEC 60947-5-2,Part 7.4.2		
Stainless steel		
~~ECS1-3016A-A3S2~~	11	~~ECS2-3025A-A3S2~~
~~ECS1-3016A-B3S2~~	12	~~ECS2-3025A-B3S2~~
5.8∅3x0.5		
Approx.209 g	Approx.208 g	

M 30		
●	○	
16 mm	25 mm	
stainless steel		
●		
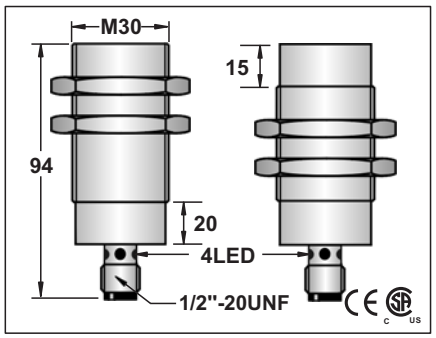		
20-250VAC		
-		
<1.8mA		
400mA		
<1.8mA		
5A(20ms)		
5mA		
<8V AC at 40mA		
<25Hz		
10ms/10ms		
<15%(Sr)		
<1.0%(Sr)		
IP67		
-25°C - +70°C		
<10%(Sr)		
NO		
–		
–		
RFI>3V/m / EFT>1KV / ESD>4KV (contact)		
IEC 60947-5-2,Part 7.4.1 / IEC 60947-5-2,Part 7.4.2		
Stainless steel		
~~ECS1-3016A-AUL3~~	56	~~ECS2-3025A-AUL3~~
~~ECS1-3016A-BUL3~~	56	~~ECS2-3025A-BUL3~~
Approx.147 g	Approx.137 g	

Note:
In Preparation: Part numbers with a line through the middle

AC METAL FACE EXTENDED SENSING DISTANCE PROXIMITY SWITCH

M 30	
●	○
16 mm	25 mm
Stainless steel	
●	

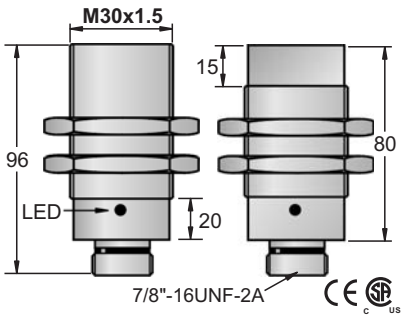

20-250VAC	
-	
<1.8mA	
400mA	
<1.8mA	
5A(20ms)	
5mA	
<8V AC at 40mA	
<25Hz	
10ms/10ms	
<15%(Sr)	
<1.0%(Sr)	
IP67	
-25 °C - +70 °C	
<10%(Sr)	
NO	
–	
–	
RFI>3V/m / EFT>1KV / ESD>4KV (contact)	
IEC 60947-5-2,Part 7.4.1 / IEC 60947-5-2,Part 7.4.2	
Stainless steel	

~~ECS1-3016A-AZL3~~	65	~~ECS2-3025A-AZL3~~
~~ECS1-3016A-BZL3~~	65	~~ECS2-3025A-BZL3~~

Approx.187 g	Approx.179 g

Note:
In Preparation: Part numbers with a line through the middle