DC METAL FACE LONG SENSING DISTANCE PROXIMITY SWITCH

M 8	
●	○
3 mm	6 mm
Stainless steel	
●	
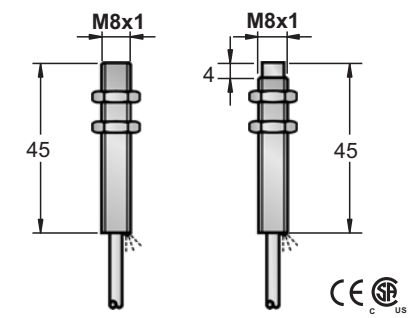	
10-30VDC or 10-55VDC	
<10%	
<10mA	
200mA	
<0.01mA	
-	
-	
<1.5V	
500HZ	
0.1ms/0.1ms	
<15%(Sr)	
<1.0%(Sr)	
IP67	
-25 °C - +70°C	
<10%(Sr)	
YES	
220mA	
<10ms	
RFI>3V/m / EFT>1KV / ESD>4KV (contact)	
IEC 60947-5-2,Part 7.4.1 / IEC 60947-5-2,Part 7.4.2	
Stainless steel	

LCS1-0803N-A3U2	1	LCS2-0806N-A3U2
LCS1-0803N-B3U2	2	LCS2-0806N-B3U2
LCS1-0803P-A3U2	3	LCS2-0806P-A3U2
LCS1-0803P-B3U2	4	LCS2-0806P-B3U2

3 ϕ 3x0.15	
Approx.33 g	Approx.32 g

M 8	
●	○
3 mm	6 mm
Stainless steel	
●	
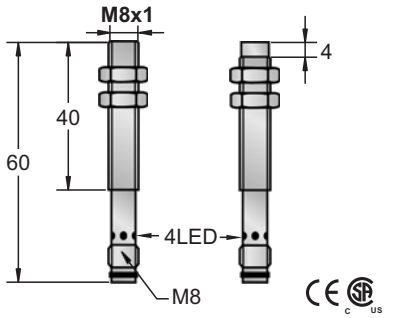	
10-30VDC or 10-55VDC	
<10%	
<10mA	
200mA	
<0.01mA	
-	
-	
<1.5V	
500HZ	
0.1ms/0.1ms	
<15%(Sr)	
<1.0%(Sr)	
IP67	
-25 °C - +70°C	
<10%(Sr)	
YES	
220mA	
<10ms	
RFI>3V/m / EFT>1KV / ESD>4KV (contact)	
IEC 60947-5-2,Part 7.4.1 / IEC 60947-5-2,Part 7.4.2	
Stainless steel	

LCS1-0803N-ACU3	29	LCS2-0806N-ACU3
LCS1-0803N-BCU3	29	LCS2-0806N-BCU3
LCS1-0803P-ACU3	30	LCS2-0806P-ACU3
LCS1-0803P-BCU3	30	LCS2-0806P-BCU3

Approx.28 g	Approx.26 g

M 8	
●	○
3 mm	6 mm
Stainless steel	
●	
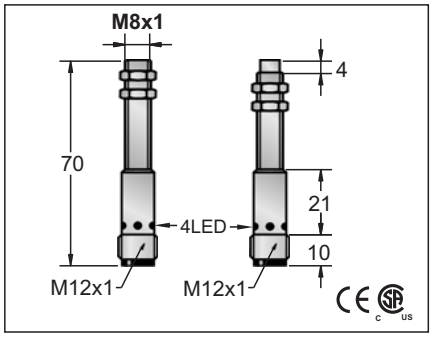	
10-30VDC or 10-55VDC	
<10%	
<10mA	
200mA	
<0.01mA	
-	
-	
<1.5V	
500HZ	
0.1ms/0.1ms	
<15%(Sr)	
<1.0%(Sr)	
IP67	
-25 °C - +70°C	
<10%(Sr)	
YES	
220mA	
<10ms	
RFI>3V/m / EFT>1KV / ESD>4KV (contact)	
IEC 60947-5-2,Part 7.4.1 / IEC 60947-5-2,Part 7.4.2	
Stainless steel	

LCS1-0803N-ARU4	33	LCS2-0806N-ARU4
LCS1-0803N-BRU4	34	LCS2-0806N-BRU4
LCS1-0803P-ARU4	35	LCS2-0806P-ARU4
LCS1-0803P-BRU4		LCS2-0806P-BRU4

Approx.33 g	Approx.32 g

DC METAL FACE LONG SENSING DISTANCE PROXIMITY SWITCH

M12		M12		M12	
●	○	●	○	●	○
6 mm	10 mm	6 mm	10 mm	6 mm	10 mm
Stainless steel		Stainless steel		Stainless steel	
●		●		●	

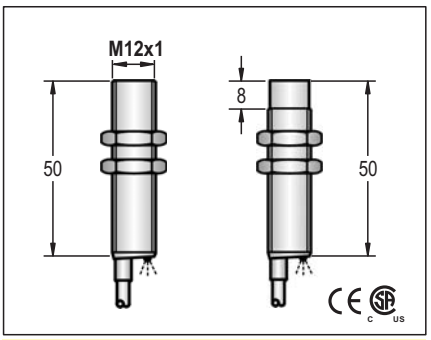

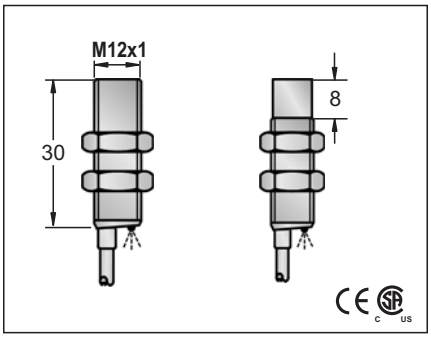

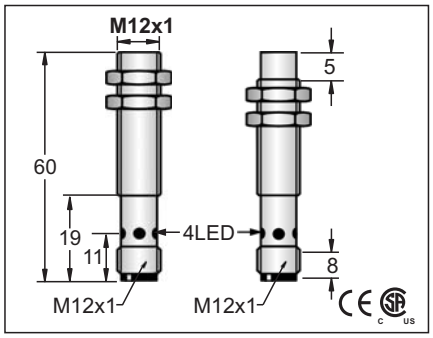

10-30VDC		
<10%		
<10mA		
200mA		
<0.01mA		
-		
-		
<1.5V		
1KHZ	500HZ	
0.1ms/0.1ms	0.2ms/0.2ms	
<15%(Sr)		
<1.0%(Sr)		
IP67		
-25°C – +70℃		
<10%(Sr)		
YES		
220mA		
<10ms		
RFI>3V/m / EFT>1KV / ESD>4KV (contact)		
IEC 60947-5-2,Part 7.4.1 / IEC 60947-5-2,Part 7.4.2		
Stainless steel		
LCS1-1206N-A3U2	1	LCS2-1210N-A3U2
LCS1-1206N-B3U2	2	LCS2-1210N-B3U2
LCS1-1206P-A3U2	3	LCS2-1210P-A3U2
LCS1-1206P-B3U2	4	LCS2-1210P-B3U2
4 ϕ 3x0.15		
Approx.67 g	Approx.65 g	

10-30VDC		
<10%		
<10mA		
200mA		
<0.01mA		
-		
-		
<1.5V		
1KHZ	500HZ	
0.1ms/0.1ms	0.2ms/0.2ms	
<15%(Sr)		
<1.0%(Sr)		
IP67		
-25°C – +70℃		
<10%(Sr)		
YES		
220mA		
<10ms		
RFI>3V/m / EFT>1KV / ESD>4KV (contact)		
IEC 60947-5-2,Part 7.4.1 / IEC 60947-5-2,Part 7.4.2		
Stainless steel		
LCS1-1206N-A3S2	1	LCS2-1210N-A3S2
LCS1-1206N-B3S2	2	LCS2-1210N-B3S2
LCS1-1206P-A3S2	3	LCS2-1210P-A3S2
LCS1-1206P-B3S2	4	LCS2-1210P-B3S2
4 ϕ 3x0.15		
Approx.62 g	Approx.60 g	

Please see Page 18 for details and specifications of DC 2-Wire models on this page.

10-30VDC		
<10%		
<10mA		
200mA		
<0.01mA		
-		
-		
<1.5V		
1KHZ	500HZ	
0.1ms/0.1ms	0.2ms/0.2ms	
<15%(Sr)		
<1.0%(Sr)		
IP67		
-25°C – +70℃		
<10%(Sr)		
YES		
220mA		
<10ms		
RFI>3V/m / EFT>1KV / ESD>4KV (contact)		
IEC 60947-5-2,Part 7.4.1 / IEC 60947-5-2,Part 7.4.2		
Stainless steel		
LCS1-1206N-ARU4	33	LCS2-1210N-ARU4
LCS1-1206N-BRU4	34	LCS2-1210N-BRU4
LCS1-1206P-ARU4	35	LCS2-1210P-ARU4
LCS1-1206P-BRU4	36	LCS2-1210P-BRU4
Approx.31 g	Approx.30 g	

Note:
Coming Soon : Part numbers with underline

DC METAL FACE LONG SENSING DISTANCE PROXIMITY SWITCH

M12		M18		M18	
●	○	●	○	●	○
12 mm	20 mm	12 mm	20 mm	12 mm	20 mm
Stainless steel		Stainless steel		Stainless steel	
●		●		●	

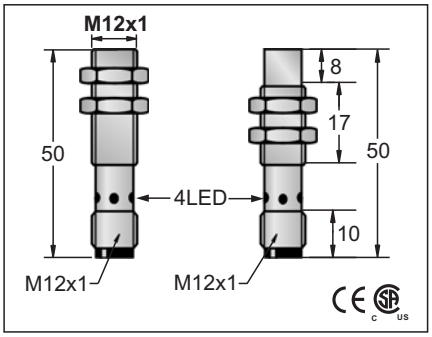

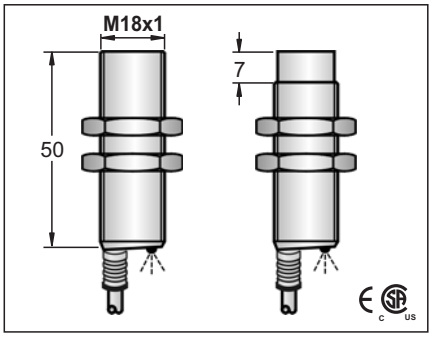

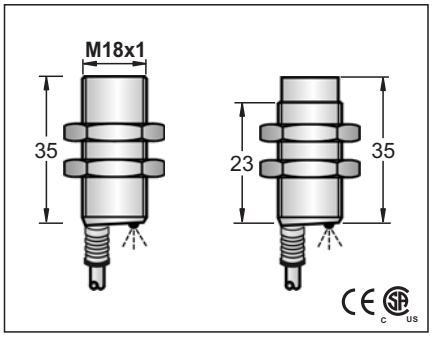

10-30VDC		10-30VDC		10-30VDC	
<10%		<10%		<10%	
<10mA		<10mA		<10mA	
200mA		200mA		200mA	
<0.01mA		<0.01mA		<0.01mA	
-		-		-	
-		-		-	
<1.5V		<1.5V		<1.5V	
1KHZ	500HZ	300HZ	100HZ	300HZ	100HZ
0.1ms/0.1ms	0.2ms/0.2ms	0.5ms/0.5ms	1ms/1ms	0.5ms/0.5ms	1ms/1ms
<15%(Sr)		<15%(Sr)		<15%(Sr)	
<1.0%(Sr)		<1.0%(Sr)		<1.0%(Sr)	
IP67		IP67		IP67	
-25°C－+70℃		-25°C－+70℃		-25°C－+70℃	
<10%(Sr)		<10%(Sr)		<10%(Sr)	
YES		YES		YES	
220mA		220mA		220mA	
<10ms		<10ms		<10ms	
RFI>3V/m / EFT>1KV / ESD>4KV (contact)		RFI>3V/m / EFT>1KV / ESD>4KV (contact)		RFI>3V/m / EFT>1KV / ESD>4KV (contact)	
IEC 60947-5-2,Part 7.4.1 / IEC 60947-5-2,Part 7.4.2		IEC 60947-5-2,Part 7.4.1 / IEC 60947-5-2,Part 7.4.2		IEC 60947-5-2,Part 7.4.1 / IEC 60947-5-2,Part 7.4.2	
Stainless steel		Stainless steel		Stainless steel	

LCS1-1206N-ARS4	33	LCS1-1210N-ARS4	LCS1-1812N-A3U2	1	LCS2-1820N-A3U2	LCS1-1812N-A3S2	1	LCS2-1820N-A3S2
LCS1-1206N-BRS4	34	LCS1-1210N-BRS4	LCS1-1812N-B3U2	2	LCS2-1820N-B3U2	LCS1-1812N-B3S2	2	LCS2-1820N-B3S2
LCS1-1206P-ARS4	35	LCS1-1210P-ARS4	LCS1-1812P-A3U2	3	LCS2-1820P-A3U2	LCS1-1812P-A3S2	3	LCS2-1820P-A3S2
LCS1-1206P-BRS4	36	LCS1-1210P-BRS4	LCS1-1812P-B3U2	4	LCS2-1820P-B3U2	LCS1-1812P-B3S2	4	LCS2-1820P-B3S2

Please see Page 18 for details and specifications of DC 2-Wire models on this page.

		5.0 ϕ44x0.1		5.0 ϕ44x0.1	
Approx.25 g	Approx.23 g	Approx.110 g	Approx.114 g	Approx.132 g	Approx.134 g

Note:
Coming Soon : Part numbers with underline

DC METAL FACE LONG SENSING DISTANCE PROXIMITY SWITCH

M 18		M 18		M 18	
●	○	●	○	●	○
12 mm	20 mm	12 mm	20 mm	12 mm	20 mm
stainless steel		stainless steel		stainless steel	
●		●		●	

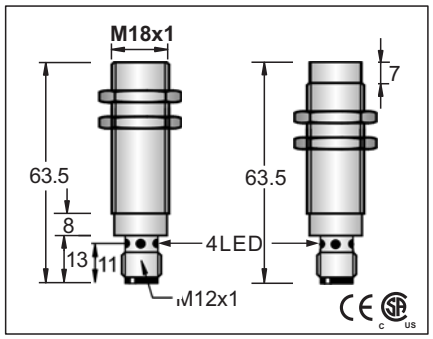

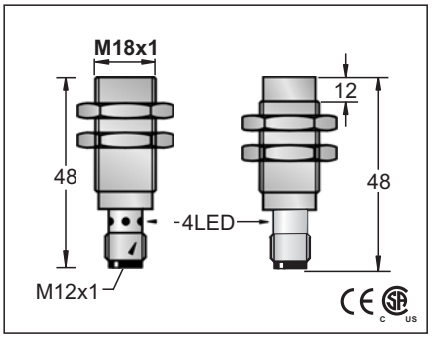

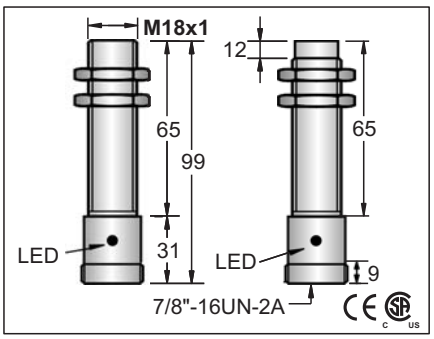

10-30VDC			10-30VDC			10-30VDC		
<10%			<10%			<10%		
<10mA			<10mA			<10mA		
200mA			200mA			200mA		
<0.01mA			<0.01mA			<0.01mA		
-			-			-		
-			-			-		
<1.5V			<1.5V			<1.5V		
300HZ	100HZ		300HZ	100HZ		300HZ	100HZ	
0.5ms/0.5ms	1ms/1ms		0.5ms/0.5ms	1ms/1ms		0.5ms/0.5ms	1ms/1ms	
<15%(Sr)			<15%(Sr)			<15%(Sr)		
<1.0%(Sr)			<1.0%(Sr)			<1.0%(Sr)		
IP67			IP67			IP67		
-25°C – +70℃			-25°C – +70℃			-25°C – +70℃		
<10%(Sr)			<10%(Sr)			<10%(Sr)		
YES			YES			YES		
220mA			220mA			220mA		
<10ms			<10ms			<10ms		
RFI>3V/m / EFT>1KV / ESD>4KV (contact)			RFI>3V/m / EFT>1KV / ESD>4KV (contact)			RFI>3V/m / EFT>1KV / ESD>4KV (contact)		
IEC 60947-5-2,Part 7.4.1 / IEC 60947-5-2,Part 7.4.2			IEC 60947-5-2,Part 7.4.1 / IEC 60947-5-2,Part 7.4.2			IEC 60947-5-2,Part 7.4.1 / IEC 60947-5-2,Part 7.4.2		
Stainless steel			Stainless steel			Stainless steel		
LCS1-1812N-ARU4	33	LCS2-1820N-ARU4	LCS1-1812N-ARS4	33	LCS2-1820N-ARS4	LCS1-1812N-AZU4	41	LCS2-1820N-AZU4
LCS1-1812N-BRU4	34	LCS2-1820N-BRU4	LCS1-1812N-BRS4	34	LCS2-1820N-BRS4	LCS1-1812N-BZU4	42	LCS2-1820N-BZU4
LCS1-1812P-ARU4	35	LCS2-1820P-ARU4	LCS1-1812P-ARS4	35	LCS2-1820P-ARS4	LCS1-1812P-AZU4	43	LCS2-1820P-AZU4
LCS1-1812P-BRU4	36	LCS2-1820P-BRU4	LCS1-1812P-BRS4	36	LCS2-1820P-BRS4	LCS1-1812P-BZU4	44	LCS2-1820P-BZU4
Approx.94 g		Approx.91 g	Approx.50 g		Approx.50 g	Approx.94 g		Approx.91 g

Please see Page 18 for details and specifications of DC 2-Wire models on this page.

Note:
Coming Soon : Part numbers with underline

DC METAL FACE LONG SENSING DISTANCE PROXIMITY SWITCH

M 30		M 30		M 30	
●	○	●	○	●	○
20 mm	40 mm	20 mm	40 mm	20 mm	40 mm
stainless steel		stainless steel		stainless steel	
●		●		●	

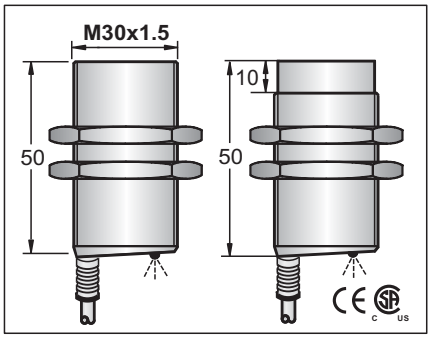

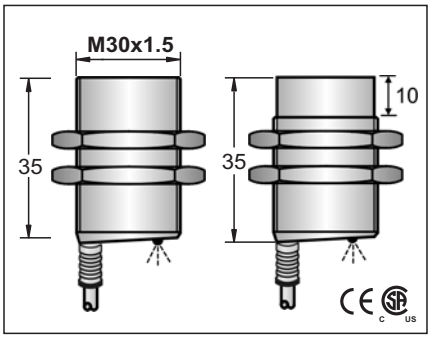

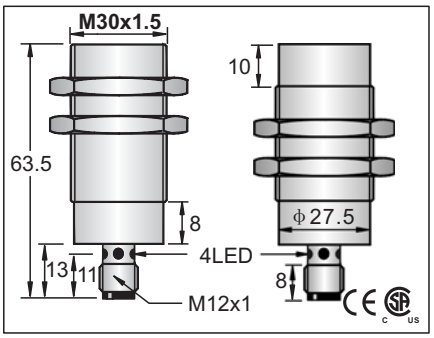

10-30VDC		
<10%		
<10mA		
200mA		
<0.01mA		
-		
-		
<1.5V		
300HZ	100HZ	
0.5ms/0.5ms	1ms/1ms	
<15%(Sr)		
<1.0%(Sr)		
IP67		
-25°C－+70℃		
<10%(Sr)		
YES		
220mA		
<10ms		
RFI>3V/m / EFT>1KV / ESD>4KV (contact)		
IEC 60947-5-2,Part 7.4.1 / IEC 60947-5-2,Part 7.4.2		
Stainless steel		
LCS1-3020N-A3U2	1	LCS2-3040N-A3U2
LCS1-3020N-B3U2	2	LCS2-3040N-B3U2
LCS1-3020P-A3U2	3	LCS2-3040P-A3U2
LCS1-3020P-B3U2	4	LCS2-3040P-B3U2
5.8ϕ3x0.5		
Approx.231 g	Approx.241 g	

10-30VDC		
<10%		
<10mA		
200mA		
<0.01mA		
-		
-		
<1.5V		
300HZ	100HZ	
0.5ms/0.5ms	1ms/1ms	
<15%(Sr)		
<1.0%(Sr)		
IP67		
-25°C－+70℃		
<10%(Sr)		
YES		
220mA		
<10ms		
RFI>3V/m / EFT>1KV / ESD>4KV (contact)		
IEC 60947-5-2,Part 7.4.1 / IEC 60947-5-2,Part 7.4.2		
Stainless steel		
LCS1-3020N-A3S2	1	LCS2-3040N-A3S2
LCS1-3020N-B3S2	2	LCS2-3040N-B3S2
LCS1-3020P-A3S2	3	LCS2-3040P-A3S2
LCS1-3020P-B3S2	4	LCS2-3040P-B3S2
5.8ϕ3x0.5		
Approx.180 g	Approx.182 g	

10-30VDC		
<10%		
<10mA		
200mA		
<0.01mA		
-		
-		
<1.5V		
300HZ	100HZ	
0.5ms/0.5ms	1ms/1ms	
<15%(Sr)		
<1.0%(Sr)		
IP67		
-25°C－+70℃		
<10%(Sr)		
YES		
220mA		
<10ms		
RFI>3V/m / EFT>1KV / ESD>4KV (contact)		
IEC 60947-5-2,Part 7.4.1 / IEC 60947-5-2,Part 7.4.2		
Stainless steel		
LCS1-3020N-ARU4	33	LCS2-3040N-ARU4
LCS1-3020N-BRU4	34	LCS2-3040N-BRU4
LCS1-3020P-ARU4	35	LCS2-3040P-ARU4
LCS1-3020P-BRU4	36	LCS2-3040P-BRU4
Approx.147 g	Approx.170 g	

Please see Page 18 for details and specifications of DC 2-Wire models on this page.

Note:
Coming Soon : Part numbers with underline

DC METAL FACE LONG SENSING DISTANCE PROXIMITY SWITCH

M30		M30		M 40	
●	○	●	○	●	○
20 mm	40 mm	22 mm	40 mm	30 mm	60 mm
Stainless steel		Stainless steel		stainless steel	
●		●		●	

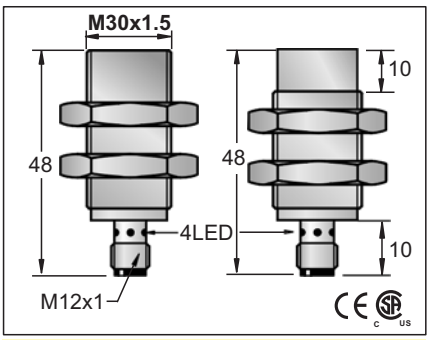

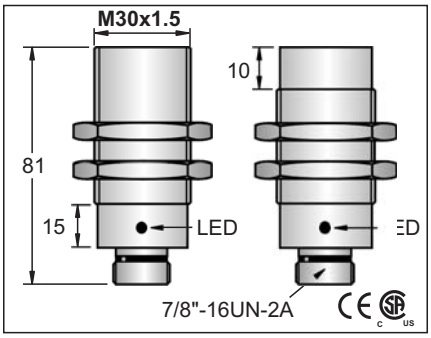

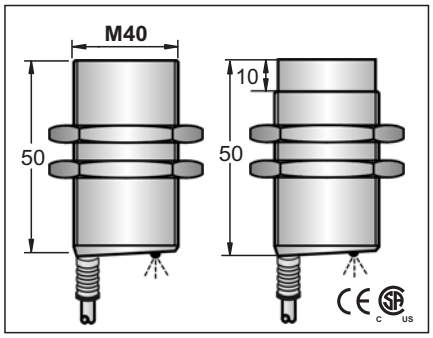

10-30VDC		10-30VDC		10-30VDC	
<10%		<10%		<10%	
<10mA		<10mA		<10mA	
200mA		200mA		200mA	
<0.01mA		<0.01mA		<0.01mA	
-		-		-	
-		-		-	
<1.5V		<1.5V		<1.5V	
300HZ	100HZ	300HZ	100HZ	300HZ	100HZ
0.5ms/0.5ms	1ms/1ms	0.5ms/0.5ms	1ms/1ms	0.5ms/0.5ms	1ms/1ms
<15%(Sr)		<15%(Sr)		<15%(Sr)	
<1.0%(Sr)		<1.0%(Sr)		<1.0%(Sr)	
IP67		IP67		IP67	
-25°C－+70℃		-25°C－+70℃		-25°C－+70℃	
<10%(Sr)		<10%(Sr)		<10%(Sr)	
YES		YES		YES	
220mA		220mA		220mA	
<10ms		<10ms		<10ms	
RFI>3V/m / EFT>1KV / ESD>4KV (contact)		RFI>3V/m / EFT>1KV / ESD>4KV (contact)		RFI>3V/m / EFT>1KV / ESD>4KV (contact)	
IEC 60947-5-2,Part 7.4.1 / IEC 60947-5-2,Part 7.4.2		IEC 60947-5-2,Part 7.4.1 / IEC 60947-5-2,Part 7.4.2		IEC 60947-5-2,Part 7.4.1 / IEC 60947-5-2,Part 7.4.2	
Stainless steel		Stainless steel		Stainless steel	

LCS1-3020N-ARS4	33	LCS2-3040N-ARS4	LCS1-3022N-AZU4	41	LCS2-3040N-AZU4	LCS1-4030N-A3U2	1	LCS2-4060N-A3U2
LCS1-3020N-BRS4	34	LCS2-3040N-BRS4	LCS1-3022N-BZU4	42	LCS2-3040N-BZU4	LCS1-4030N-B3U2	2	LCS2-4060N-B3U2
LCS1-3020P-ARS4	35	LCS2-3040P-ARS4	LCS1-3022P-AZU4	43	LCS2-3040P-AZU4	LCS1-4030P-A3U2	3	LCS2-4060P-A3U2
LCS1-3020P-BRS4	36	LCS2-3040P-BRS4	LCS1-3022P-BZU4	44	LCS2-3040P-BZU4	LCS1-4030P-B3U2	4	LCS2-4060P-B3U2

Please see Page 18 for details and specifications of DC 2-Wire models on this page.

				5.8⌀3x0.5	
Approx.111 g	Approx.121 g	Approx.187 g	Approx.179 g	Approx.231 g	Approx.241 g

Note:
Coming Soon : Part numbers with underline

DC METAL FACE LONG SENSING DISTANCE PROXIMITY SWITCH

M 40		M 40		M40	
●	○	●	○	●	○
30 mm	60 mm	30 mm	60 mm	30mm	60 mm
stainless steel		stainless steel		Stainless steel	
●		●		●	

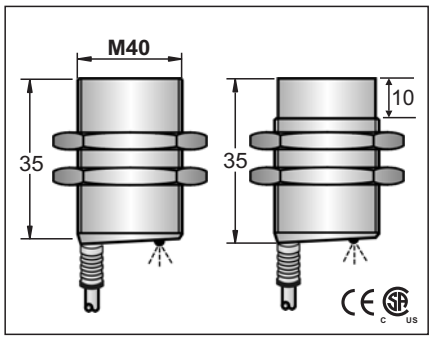

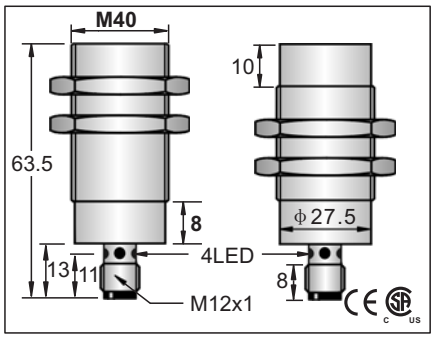

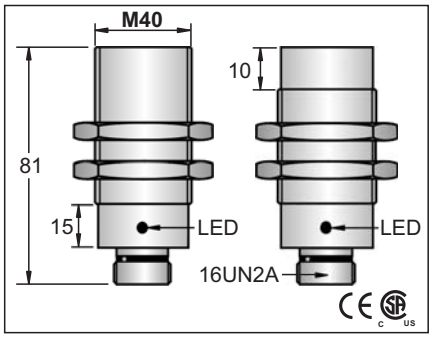

10-30VDC		10-30VDC		10-30VDC	
<10%		<10%		<10%	
<10mA		<10mA		<10mA	
200mA		200mA		200mA	
<0.01mA		<0.01mA		<0.01mA	
-		-		-	
-		-		-	
<1.5V		<1.5V		<1.5V	
300HZ	100HZ	300HZ	100HZ	300HZ	100HZ
0.5ms/0.5ms	1ms/1ms	0.5ms/0.5ms	1ms/1ms	0.5ms/0.5ms	1ms/1ms
<15%(Sr)		<15%(Sr)		<15%(Sr)	
<1.0%(Sr)		<1.0%(Sr)		<1.0%(Sr)	
IP67		IP67		IP67	
-25°C－+70℃		-25°C－+70℃		-25°C－+70℃	
<10%(Sr)		<10%(Sr)		<10%(Sr)	
YES		YES		YES	
220mA		220mA		220mA	
<10ms		<10ms		<10ms	
RFI>3V/m / EFT>1KV / ESD>4KV (contact)		RFI>3V/m / EFT>1KV / ESD>4KV (contact)		RFI>3V/m / EFT>1KV / ESD>4KV (contact)	
IEC 60947-5-2,Part 7.4.1 / IEC 60947-5-2,Part 7.4.2		IEC 60947-5-2,Part 7.4.1 / IEC 60947-5-2,Part 7.4.2		IEC 60947-5-2,Part 7.4.1 / IEC 60947-5-2,Part 7.4.2	
Stainless steel		Stainless steel		Stainless steel	

LCS1-4030N-A3S2	1	LCS2-4060N-A3S2	LCS1-4030N-ARU4	33	LCS2-4060N-ARU4	LCS1-4030N-AZU4	41	LCS2-4060N-AZU4
LCS1-4030N-B3S2	2	LCS2-4060N-B3S2	LCS1-4030N-BRU4	34	LCS2-4060N-BRU4	LCS1-4030N-BZU4	42	LCS2-4060N-BZU4
LCS1-4030P-A3S2	3	LCS2-4060P-A3S2	LCS1-4030P-ARU4	35	LCS2-4060P-ARU4	LCS1-4030P-AZU4	43	LCS2-4060P-AZU4
LCS1-4030P-B3S2	4	LCS2-4060P-B3S2	LCS1-4030P-BRU4	36	LCS2-4060P-BRU4	LCS1-4030P-BZU4	44	LCS2-4060P-BZU4

5.8ϕ3x0.5					
Approx.180 g	Approx.182 g	Approx.147 g	Approx.170 g	Approx.187 g	Approx.179 g

Note:
Coming Soon : Part numbers with underline