AC STANDARD BODY WITH EXTENDED SENSING DISTANCE CONNECTOR TYPE

ϕ11			M12			M18		
●	○		●	○		●	○	
4 mm	8 mm		4 mm	8 mm		8 mm	16 mm	
nickel plated brass			nickel plated brass			nickel plated brass		
●			●			●		
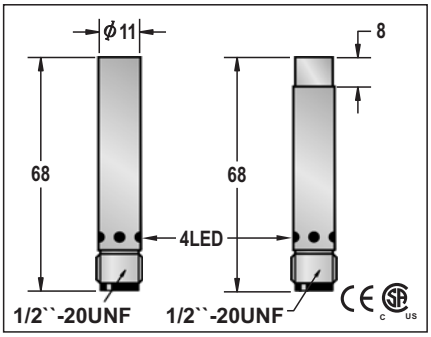			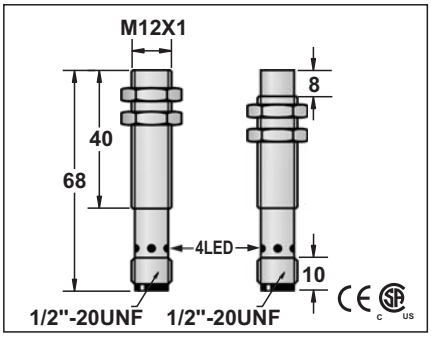			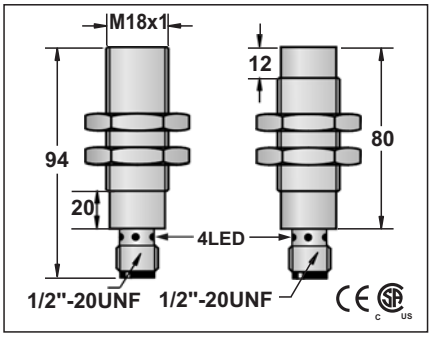		
20-250VAC			20-250VAC			20-250VAC		
-			-			-		
<1.8mA			<1.8mA			<1.8mA		
400mA			400mA			400mA		
1.8mA			1.8mA			1.8mA		
5A(20ms)			5A(20ms)			5A(20ms)		
5mA			5mA			5mA		
<8VAC AT 400MA			<8VAC AT 400MA			<8VAC AT 400MA		
<25HZ			<25HZ			<25HZ		
10ms/10ms			10ms/10ms			10ms/10ms		
<15%			<15%			<15%		
<1.0%(Sr)			<1.0%(Sr)			<1.0%(Sr)		
IP67			IP67			IP67		
-25°C- +70°C			-25°C- +70°C			-25°C - +70°C		
<10%(Sr)			<10%(Sr)			<10%(Sr)		
-			-			-		
-			-			-		
-			-			-		
RFI>3V/m / EFT>1KV / ESD>4KV (contact)			RFI>3V/m / EFT>1KV / ESD>4KV (contact)			RFI>3V/m / EFT>1KV / ESD>4KV (contact)		
IEC 60947-5-2,Part 7.4.1 / IEC 60947-5-2,Part 7.4.2			IEC 60947-5-2,Part 7.4.1 / IEC 60947-5-2,Part 7.4.2			IEC 60947-5-2,Part 7.4.1 / IEC 60947-5-2,Part 7.4.2		
POM			POM		PBT	PBT		
ECM1-D1104A-AUL3	55	ECM2-D1108A-AUL3	ECM1-1204A-AUL3	55	ECM2-1208A-AUL3	ECM1-1808A-AUL3	55	ECM2-1816A-AUL3
ECM1-D1104A-BUL3	55	ECM2-D1108A-BUL3	ECM1-1204A-BUL3	55	ECM2-1208A-BUL3	ECM1-1808A-BUL3	55	ECM2-1816A-BUL3
Approx.30 g	Approx.29 g		Approx.30 g	Approx.29 g		Approx.94 g	Approx.91 g	

AC STANDARD BODY WITH EXTENDED SENSING DISTANCE CONNECTOR TYPE

M30		
●	○	
16 mm	25 mm	
nickel plated brass		
●		

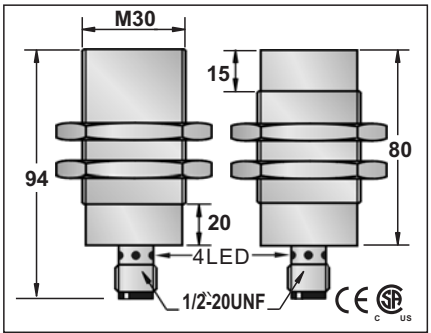

20-250VAC		
-		
<1.8mA		
400mA		
1.8mA		
5A(20ms)		
5mA		
<8VAC AT 400MA		
<25HZ		
10ms/10ms		
<15%		
<1.0%(Sr)		
IP67		
-25°C - +70°C		
<10%(Sr)		
-		
-		
-		
RFI>3V/m / EFT>1KV / ESD>4KV (contact)		
IEC 60947-5-2,Part 7.4.1 / IEC 60947-5-2,Part 7.4.2		
PBT		
ECM1-3016A-AUL3	51	ECM2-3025A-AUL3
ECM1-3016A-BUL3	51	ECM2-3025A-BUL3
Approx.187 g	Approx.179 g	