DC METAL FACE EXTENDED SENSING DISTANCE PROXIMITY SWITCH

M8		M8		M8	
●	○	●	○	●	○
2 mm	4 mm	2 mm	4 mm	2 mm	4 mm
Stainless steel		Stainless steel		Stainless steel	
●		●		●	

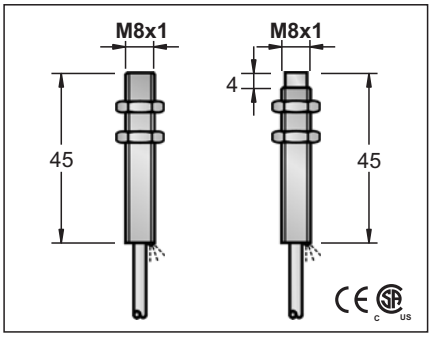

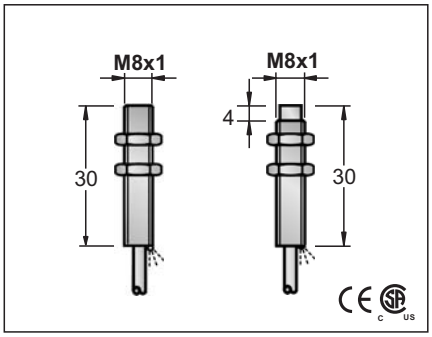

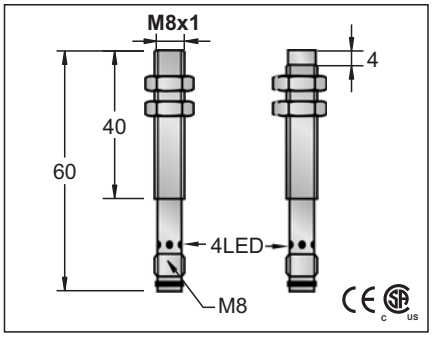

10-30VDC or 10-55VDC			10-30VDC or 10-55VDC			10-30VDC or 10-55VDC	
<10%			<10%			<10%	
<10mA			<10mA			<10mA	
200mA			200mA			200mA	
<0.01mA			<0.01mA			<0.01mA	
-			-			-	
-			-			-	
<1.5V			<1.5V			<1.5V	
2KHZ	1KHZ		2KHZ	1KHZ		2KHZ	1KHZ
0.1ms/0.1ms	0.2ms/0.2ms		0.1ms/0.1ms	0.2ms/0.2ms		0.1ms/0.1ms	0.2ms/0.2ms
<15%(Sr)			<15%(Sr)			<15%(Sr)	
<1.0%(Sr)			<1.0%(Sr)			<1.0%(Sr)	
IP67			IP67			IP67	
-25°C – +70°C			-25°C – +70°C			-25°C – +70°C	
<10%(Sr)			<10%(Sr)			<10%(Sr)	
YES			YES			YES	
220mA			220mA			220mA	
<10ms			<10ms			<10ms	
RFI>3V/m / EFT>1KV / ESD>4KV (contact)			RFI>3V/m / EFT>1KV / ESD>4KV (contact)			RFI>3V/m / EFT>1KV / ESD>4KV (contact)	
IEC 60947-5-2,Part 7.4.1 / IEC 60947-5-2,Part 7.4.2			IEC 60947-5-2,Part 7.4.1 / IEC 60947-5-2,Part 7.4.2			IEC 60947-5-2,Part 7.4.1 / IEC 60947-5-2,Part 7.4.2	
Stainless steel			Stainless steel			Stainless steel	
ECS1-0802N-A3U2	1	ECS2-0804N-A3U2	ECS1-0802N-A3S2	1	ECS2-0804N-A3S2	ECS1-0802N-ACU3	29	ECS2-0804N-ACU3
ECS1-0802N-B3U2	2	ECS2-0804N-B3U2	ECS1-0802N-B3S2	2	ECS2-0804N-B3S2	ECS1-0802N-BCU3	29	ECS2-0804N-BCU3
ECS1-0802P-A3U2	3	ECS2-0804P-A3U2	ECS1-0802P-A3S2	3	ECS2-0804P-A3S2	ECS1-0802P-ACU3	30	ECS2-0804P-ACU3
ECS1-0802P-B3U2	4	ECS2-0804P-B3U2	ECS1-0802P-B3S2	4	ECS2-0804P-B3S2	ECS1-0802P-BCU3	30	ECS2-0804P-BCU3
~~ECS1-0802P-S4U2~~	6	~~ECS2-0804P-S4U2~~	~~ECS1-0802P-S4S2~~	6	~~ECS2-0804P-S4S2~~	~~ECS1-0802P-SCU3~~	32	~~ECS2-0804P-SCU3~~
~~ECS1-0802N-S4U2~~	5	~~ECS2-0804N-S4U2~~	~~ECS1-0802N-S4S2~~	5	~~ECS2-0804N-S4S2~~	~~ECS1-0802N-SCU3~~	31	~~ECS2-0804N-SCU3~~
ECS1-0802C-A2U2	7	ECS2-0804C-A2U2	ECS1-0802C-A2S2	7	ECS2-0804C-A2S2	ECS1-0802C-ACU3	39	ECS2-0804C-ACU3
ECS1-0802C-B2U2	8	ECS2-0804C-B2U2	ECS1-0802C-B2S2	8	ECS2-0804C-B2S2	ECS1-0802C-BCU3	78	ECS2-0804C-BCU3
			Please see Page 18 for details and specifications of DC 2-Wire models on this page.					
3φ3x0.15			3φ3x0.15					
Approx.40 g	Approx.40 g		Approx.35 g	Approx.35 g		Approx.15 g	Approx.15 g	

Note:

Coming Soon : Part numbers with underline

In Preparation: Part numbers with a line through the middle

DC METAL FACE EXTENDED SENSING DISTANCE PROXIMITY SWITCH

M8		M8		M8	
●	○	●	○	●	○
2 mm	4 mm	2 mm	4 mm	2 mm	4 mm
Stainless steel		Stainless steel		Stainless steel	
●		●		●	

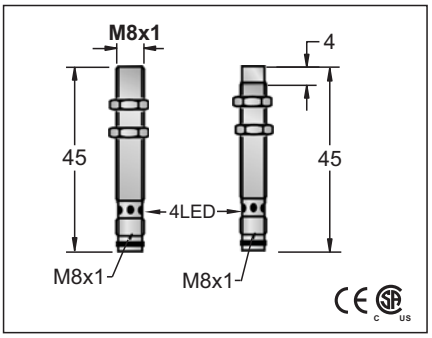

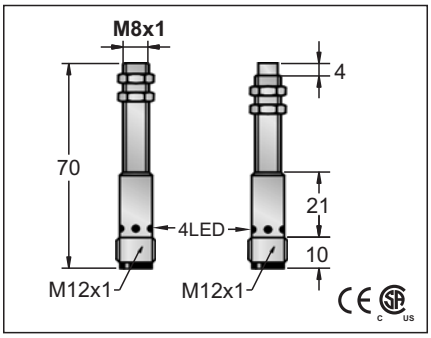

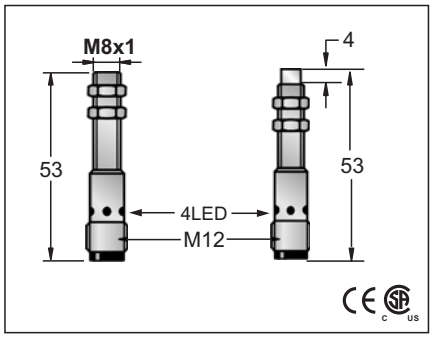

10-30VDC or 10-55VDC			10-30VDC or 10-55VDC			10-30VDC or 10-55VDC	
<10%			<10%			<10%	
<10mA			<10mA			<10mA	
200mA			200mA			200mA	
<0.01mA			<0.01mA			<0.01mA	
-			-			-	
-			-			-	
<1.5V			<1.5V			<1.5V	
2KHZ	1KHZ		2KHZ	1KHZ		2KHZ	1KHZ
0.1ms/0.1ms	0.2ms/0.2ms		0.1ms/0.1ms	0.2ms/0.2ms		0.1ms/0.1ms	0.2ms/0.2ms
<15%(Sr)			<15%(Sr)			<15%(Sr)	
<1.0%(Sr)			<1.0%(Sr)			<1.0%(Sr)	
IP67			IP67			IP67	
-25°C – +70℃			-25°C – +70℃			-25°C – +70℃	
<10%(Sr)			<10%(Sr)			<10%(Sr)	
YES			YES			YES	
220mA			220mA			220mA	
<10ms			<10ms			<10ms	
RFI>3V/m / EFT>1KV / ESD>4KV (contact)			RFI>3V/m / EFT>1KV / ESD>4KV (contact)			RFI>3V/m / EFT>1KV / ESD>4KV (contact)	
IEC 60947-5-2,Part 7.4.1 / IEC 60947-5-2,Part 7.4.2			IEC 60947-5-2,Part 7.4.1 / IEC 60947-5-2,Part 7.4.2			IEC 60947-5-2,Part 7.4.1 / IEC 60947-5-2,Part 7.4.2	
Stainless steel			Stainless steel			Stainless steel	
ECS1-0802N-ACS3	29	ECS2-0804N-ACS3	ECS1-0802N-ARU4	33	ECS2-0804N-ARU4	ECS1-0802N-ARS4	33	ECS2-0804N-ARS4
ECS1-0802N-BCS3	29	ECS2-0804N-BCS3	ECS1-0802N-BRU4	34	ECS2-0804N-BRU4	ECS1-0802N-BRS4	34	ECS2-0804N-BRS4
ECS1-0802P-ACS3	30	ECS2-0804P-ACS3	ECS1-0802P-ARU4	35	ECS2-0804P-ARU4	ECS1-0802P-ARS4	35	ECS2-0804P-ARS4
ECS1-0802P-BCS3	30	ECS2-0804P-BCS3	ECS1-0802P-BRU4	36	ECS2-0804P-BRU4	ECS1-0802P-BRS4	36	ECS2-0804P-BRS4
~~ECS1-0802P-SCS3~~	32	~~ECS2-0804P-SCS3~~	~~ECS1-0802P-SRU4~~	38	~~ECS2-0804P-SRU4~~	~~ECS1-0802P-SRS4~~	38	~~ECS2-0804P-SRS4~~
~~ECS1-0802N-SCS3~~	31	~~ECS2-0804N-SCS3~~	~~ECS1-0802N-SRU4~~	37	~~ECS2-0804N-SRU4~~	~~ECS1-0802N-SRS4~~	37	~~ECS2-0804N-SRS4~~
ECS1-0802C-ACS3	39	ECS2-0804C-ACS3	ECS1-0802C-ARU4	40	ECS2-0804C-ARU4	ECS1-0802C-ARS4	40	ECS2-0804C-ARS4
ECS1-0802C-BCS3	77	ECS2-0804C-BCS3	ECS1-0802C-BRU4	78	ECS2-0804C-BRU4	ECS1-0802C-BRS4	78	ECS2-0804C-BRS4
			Please see Page 18 for details and specifications of DC 2-Wire models on this page.					
Approx.12 g		Approx.12 g	Approx.22 g		Approx.22 g	Approx.17 g		Approx.17 g

Note:
Coming Soon : Part numbers with underline
In Preparation: Part numbers with a line through the middle

DC METAL FACE EXTENDED SENSING DISTANCE PROXIMITY SWITCH

M12		M12		M12	
●	○	●	○	●	○
4 mm	8 mm	4 mm	8 mm	4 mm	8 mm
Stainless steel		Stainless steel		Stainless steel	
●		●		●	

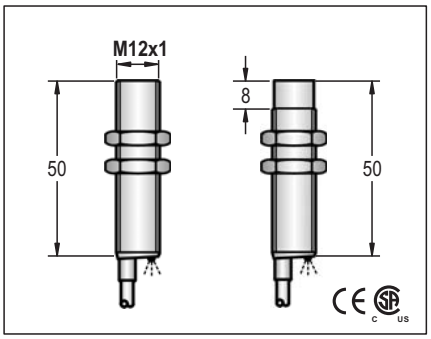

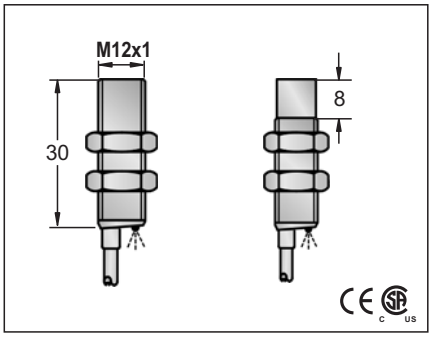

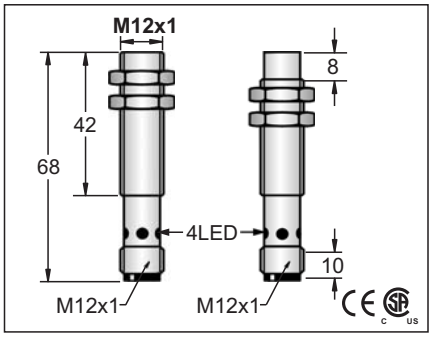

10-30VDC or 10-55VDC		
<10%		
<10mA		
200mA		
<0.01mA		
-		
-		
<1.5V		
1KHZ	500HZ	
0.2ms/0.2ms	0.5ms/0.5ms	
<15%(Sr)		
<1.0%(Sr)		
IP67		
-25°C – +70°C		
<10%(Sr)		
YES		
220mA		
<10ms		
RFI>3V/m / EFT>1KV / ESD>4KV (contact)		
IEC 60947-5-2,Part 7.4.1 / IEC 60947-5-2,Part 7.4.2		
Stainless steel		
ECS1-1204N-A3U2	1	ECS2-1208N-A3U2
ECS1-1204N-B3U2	2	ECS2-1208N-B3U2
ECS1-1204P-A3U2	3	ECS2-1208P-A3U2
ECS1-1204P-B3U2	4	ECS2-1208P-B3U2
~~ECS1-1204P-S4U2~~	6	~~ECS2-1208P-S4U2~~
~~ECS1-1204N-S4U2~~	5	~~ECS2-1208N-S4U2~~
ECS1-1204C-A2U2	7	ECS2-1208C-A2U2
ECS1-1204C-B2U2	8	ECS2-1208C-B2U2
4φ3x0.15		
Approx.67 g	Approx.65 g	

10-30VDC or 10-55VDC		
<10%		
<10mA		
200mA		
<0.01mA		
-		
-		
<1.5V		
1KHZ	500HZ	
0.2ms/0.2ms	0.5ms/0.5ms	
<15%(Sr)		
<1.0%(Sr)		
IP67		
-25°C – +70°C		
<10%(Sr)		
YES		
220mA		
<10ms		
RFI>3V/m / EFT>1KV / ESD>4KV (contact)		
IEC 60947-5-2,Part 7.4.1 / IEC 60947-5-2,Part 7.4.2		
Stainless steel		
ECS1-1204N-A3S2	1	ECS2-1208N-A3S2
ECS1-1204N-B3S2	2	ECS2-1208N-B3S2
ECS1-1204P-A3S2	3	ECS2-1208P-A3S2
ECS1-1204P-B3S2	4	ECS2-1208P-B3S2
~~ECS1-1204P-S4S2~~	6	~~ECS2-1208P-S4S2~~
~~ECS1-1204N-S4S2~~	5	~~ECS2-1208N-S4S2~~
ECS1-1204C-A2S2	7	ECS2-1208C-A2S2
ECS1-1204C-B2S2	8	ECS2-1208C-B2S2
4φ3x0.15		
Approx.62 g	Approx.60 g	

10-30VDC or 10-55VDC		
<10%		
<10mA		
200mA		
<0.01mA		
-		
-		
<1.5V		
1KHZ	500HZ	
0.2ms/0.2ms	0.5ms/0.5ms	
<15%(Sr)		
<1.0%(Sr)		
IP67		
-25°C – +70°C		
<10%(Sr)		
YES		
220mA		
<10ms		
RFI>3V/m / EFT>1KV / ESD>4KV (contact)		
IEC 60947-5-2,Part 7.4.1 / IEC 60947-5-2,Part 7.4.2		
Stainless steel		
ECS1-1204N-ARU4	33	~~ECS2-1208N-ARU4~~
ECS1-1204N-BRU4	34	~~ECS2-1208N-BRU4~~
ECS1-1204P-ARU4	35	~~ECS2-1208P-ARU4~~
ECS1-1204P-BRU4	36	~~ECS2-1208P-BRU4~~
~~ECS1-1204P-SRU4~~	38	~~ECS2-1208P-SRU4~~
~~ECS1-1204N-SRU4~~	37	~~ECS2-1208N-SRU4~~
ECS1-1204C-ARU4	40	ECS2-1208C-ARU4
ECS1-1204C-BRU4	78	ECS2-1208C-BRU4
Approx.31 g	Approx.30 g	

Please see Page 18 for details and specifications of DC 2-Wire models on this page.

Note:
Coming Soon : Part numbers with underline
In Preparation: Part numbers with a line through the middle

DC METAL FACE EXTENDED SENSING DISTANCE PROXIMITY SWITCH

M12			M18			M18		
●	○		●	○		●	○	
4 mm	8 mm		8 mm	16 mm		8 mm	16 mm	
Stainless steel			Stainless steel			Stainless steel		
●			●			●		
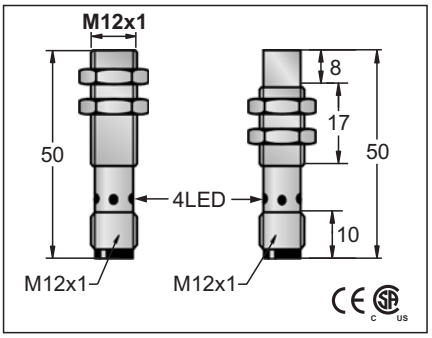			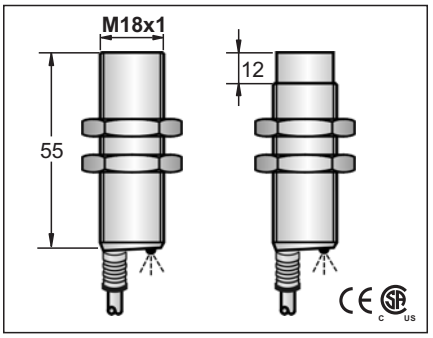			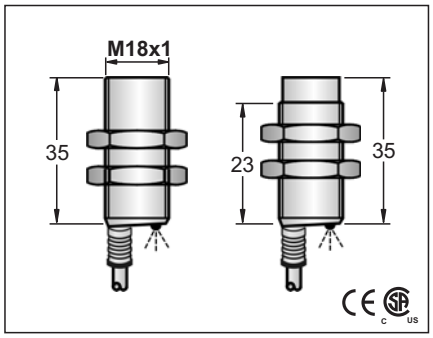		
10-30VDC or 10-55VDC			10-30VDC or 10-55VDC			10-30VDC or 10-55VDC		
<10%			<10%			<10%		
<10mA			<10mA			<10mA		
200mA			200mA			200mA		
<0.01mA			<0.01mA			<0.01mA		
-			-			-		
-			-			-		
<1.5V			<1.5V			<1.5V		
1KHZ	500HZ		500HZ	150HZ		500HZ	150HZ	
0.2ms/0.2ms	0.5ms/0.5ms		0.5ms/0.5ms	1ms/1ms		0.5ms/0.5ms	1ms/1ms	
<15%(Sr)			<15%(Sr)			<15%(Sr)		
<1.0%(Sr)			<1.0%(Sr)			<1.0%(Sr)		
IP67			IP67			IP67		
-25°C – +70℃			-25°C – +70℃			-25°C – +70℃		
<10%(Sr)			<10%(Sr)			<10%(Sr)		
YES			YES			YES		
220mA			220mA			220mA		
<10ms			<10ms			<10ms		
RFI>3V/m / EFT>1KV / ESD>4KV (contact)			RFI>3V/m / EFT>1KV / ESD>4KV (contact)			RFI>3V/m / EFT>1KV / ESD>4KV (contact)		
IEC 60947-5-2,Part 7.4.1 / IEC 60947-5-2,Part 7.4.2			IEC 60947-5-2,Part 7.4.1 / IEC 60947-5-2,Part 7.4.2			IEC 60947-5-2,Part 7.4.1 / IEC 60947-5-2,Part 7.4.2		
Stainless steel			Stainless steel			Stainless steel		
ECS1-1204N-ARS4	33	~~ECS2-1208N-ARS4~~	ECS1-1808N-A3U2	1	ECS2-1816N-A3U2	ECS1-1808N-A3S2	1	ECS2-1816N-A3S2
ECS1-1204N-BRS4	34	~~ECS2-1208N-BRS4~~	ECS1-1808N-B3U2	2	ECS2-1816N-B3U2	ECS1-1808N-B3S2	2	ECS2-1816N-B3S2
ECS1-1204P-ARS4	35	~~ECS2-1208P-ARS4~~	ECS1-1808P-A3U2	3	ECS2-1816P-A3U2	ECS1-1808P-A3S2	3	ECS2-1816P-A3S2
ECS1-1204P-BRS4	36	~~ECS2-1208P-BRS4~~	ECS1-1808P-B3U2	4	ECS2-1816P-B3U2	ECS1-1808P-B3S2	4	ECS2-1816P-B3S2
~~ECS1-1204P-SRS4~~	38	~~ECS2-1208P-SRS4~~	~~ECS1-1808P-S4U2~~	6	~~ECS2-1816P-S4U2~~	~~ECS1-1808P-S4S2~~	6	~~ECS2-1816P-S4S2~~
~~ECS1-1204N-SRS4~~	37	~~ECS2-1208N-SRS4~~	~~ECS1-1808N-S4U2~~	5	~~ECS2-1816N-S4U2~~	~~ECS1-1808N-S4S2~~	5	~~ECS2-1816N-S4S2~~
ECS1-1204C-ARS4	40	ECS2-1208C-ARS4	ECS1-1808C-A2U2	7	ECS2-1816C-A2U2	ECS1-1808C-A2S2	7	ECS2-1816C-A2S2
ECS1-1204C-BRS4	78	ECS2-1208C-BRS4	ECS1-1808C-B2U2	8	ECS2-1816C-B2U2	ECS1-1808C-B2S2	8	ECS2-1816C-B2S2
			Please see Page 18 for details and specifications of DC 2-Wire models on this page.					
			5.0 ϕ44x0.1			5.0 ϕ44x0.1		
Approx.25 g	Approx.23 g		Approx.153 g	Approx.144 g		Approx.132 g	Approx.134 g	

Note:
Coming Soon : Part numbers with underline
In Preparation: Part numbers with a line through the middle

DC METAL FACE EXTENDED SENSING DISTANCE PROXIMITY SWITCH

M 18		M 18		M 18	
●	○	●	○	●	○
8 mm	16 mm	8 mm	16 mm	8 mm	16 mm
stainless steel		stainless steel		stainless steel	
●		●		●	

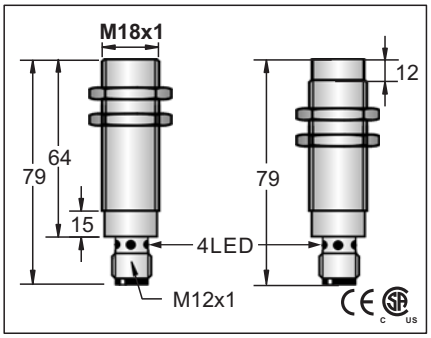

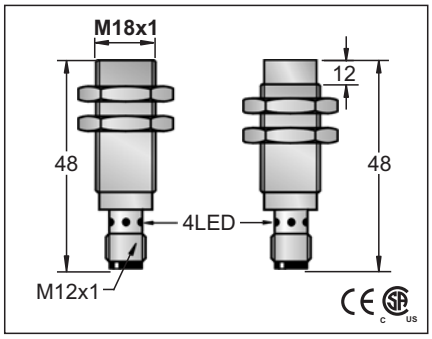

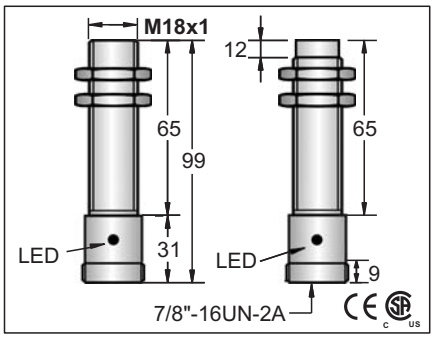

10-30VDC or 10-55VDC		10-30VDC or 10-55VDC		10-30VDC or 10-55VDC	
<10%		<10%		<10%	
<10mA		<10mA		<10mA	
200mA		200mA		200mA	
<0.01mA		<0.01mA		<0.01mA	
-		-		-	
-		-		-	
<1.5V		<1.5V		<1.5V	
500HZ	150HZ	500HZ	150HZ	500HZ	150HZ
0.5ms/0.5ms	1ms/1ms	0.5ms/0.5ms	1ms/1ms	0.5ms/0.5ms	1ms/1ms
<15%(Sr)		<15%(Sr)		<15%(Sr)	
<1.0%(Sr)		<1.0%(Sr)		<1.0%(Sr)	
IP67		IP67		IP67	
-25°C – +70℃		-25°C – +70℃		-25°C – +70℃	
<10%(Sr)		<10%(Sr)		<10%(Sr)	
YES		YES		YES	
220mA		220mA		220mA	
<10ms		<10ms		<10ms	
RFI>3V/m / EFT>1KV / ESD>4KV (contact)		RFI>3V/m / EFT>1KV / ESD>4KV (contact)		RFI>3V/m / EFT>1KV / ESD>4KV (contact)	
IEC 60947-5-2,Part 7.4.1 / IEC 60947-5-2,Part 7.4.2		IEC 60947-5-2,Part 7.4.1 / IEC 60947-5-2,Part 7.4.2		IEC 60947-5-2,Part 7.4.1 / IEC 60947-5-2,Part 7.4.2	
Stainless steel		Stainless steel		Stainless steel	

ECS1-1808N-ARU4	33	~~ECS2-1816N-ARU4~~	ECS1-1808N-ARS4	33	~~ECS2-1816N-ARS4~~	ECS1-1808N-AZU4	41	~~ECS2-1816N-AZU4~~
ECS1-1808N-BRU4	34	~~ECS2-1816N-BRU4~~	ECS1-1808N-BRS4	34	~~ECS2-1816N-BRS4~~	ECS1-1808N-BZU4	42	~~ECS2-1816N-BZU4~~
ECS1-1808P-ARU4	35	~~ECS2-1816P-ARU4~~	ECS1-1808P-ARS4	35	~~ECS2-1816P-ARS4~~	ECS1-1808P-AZU4	43	~~ECS2-1816P-AZU4~~
ECS1-1808P-BRU4	36	~~ECS2-1816P-BRU4~~	ECS1-1808P-BRS4	36	~~ECS2-1816P-BRS4~~	ECS1-1808P-BZU4	44	~~ECS2-1816P-BZU4~~
~~ECS1-1808P-SRU4~~	38	~~ECS2-1816P-SRU4~~	~~ECS1-1808P-SRS4~~	38	~~ECS2-1816P-SRS4~~	~~ECS1-1808P-SZU4~~	46	~~ECS2-1816P-SZU4~~
~~ECS1-1808N-SRU4~~	37	~~ECS2-1816N-SRU4~~	~~ECS1-1808N-SRS4~~	37	~~ECS2-1816N-SRS4~~	~~ECS1-1808N-SZU4~~	45	~~ECS2-1816N-SZU4~~
ECS1-1808C-ARU4	40	ECS2-1816C-ARU4	ECS1-1808C-ARS4	40	ECS2-1816C-ARS4	ECS1-1808C-AZU4	47	ECS2-1816C-AZU4
ECS1-1808C-BRU4	78	ECS2-1816C-BRU4	ECS1-1808C-BRS4	78	ECS2-1816C-BRS4	ECS1-1808C-BZU4	79	ECS2-1816C-BZU4

Please see Page 18 for details and specifications of DC 2-Wire models on this page.

Approx.94 g	Approx.91 g	Approx.50 g	Approx.50 g	Approx.94 g	Approx.91 g

Note:
Coming Soon : Part numbers with underline
In Preparation: Part numbers with a line through the middle

DC METAL FACE EXTENDED SENSING DISTANCE PROXIMITY SWITCH

M 30		M 30		M 30	
●	○	●	○	●	○
16 mm	25 mm	16 mm	25 mm	16 mm	25 mm
stainless steel		stainless steel		stainless steel	
●		●		●	

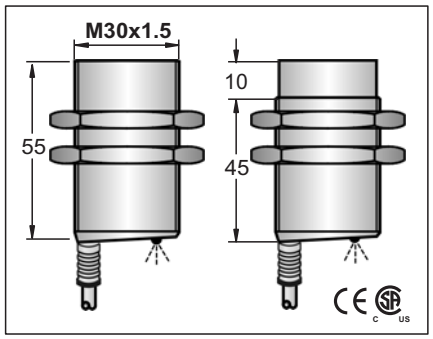

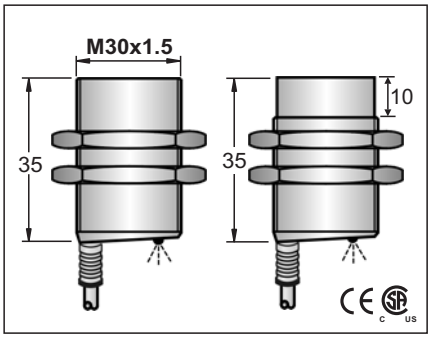

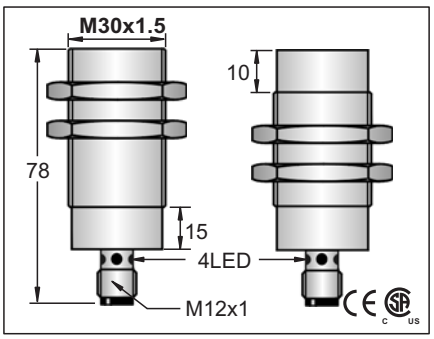

10-30VDC or 10-55VDC		
<10%		
<10mA		
200mA		
<0.01mA		
-		
-		
<1.5V		
150HZ	100HZ	
1ms/1ms	1ms/1ms	
<15%(Sr)		
<1.0%(Sr)		
IP67		
-25°C – +70°C		
<10%(Sr)		
YES		
220mA		
<10ms		
RFI>3V/m / EFT>1KV / ESD>4KV (contact)		
IEC 60947-5-2,Part 7.4.1 / IEC 60947-5-2,Part 7.4.2		
Stainless steel		
~~ECS1-3016N-A3U2~~	1	~~ECS2-3025N-A3U2~~
~~ECS1-3016N-B3U2~~	2	~~ECS2-3025N-B3U2~~
~~ECS1-3016P-A3U2~~	3	~~ECS2-3025P-A3U2~~
~~ECS1-3016P-B3U2~~	4	~~ECS2-3025P-B3U2~~
~~ECS1-3016P-S4U2~~	6	~~ECS2-3025P-S4U2~~
~~ECS1-3016N-S4U2~~	5	~~ECS2-3025N-S4U2~~
ECS1-3016C-A2U2	7	ECS2-3025C-A2U2
ECS1-3016C-B2U2	8	ECS2-3025C-B2U2
5.8⌀3x0.5		
Approx.217 g	Approx.207 g	

10-30VDC or 10-55VDC		
<10%		
<10mA		
200mA		
<0.01mA		
-		
-		
<1.5V		
150HZ	100HZ	
1ms/1ms	1ms/1ms	
<15%(Sr)		
<1.0%(Sr)		
IP67		
-25°C – +70°C		
<10%(Sr)		
YES		
220mA		
<10ms		
RFI>3V/m / EFT>1KV / ESD>4KV (contact)		
IEC 60947-5-2,Part 7.4.1 / IEC 60947-5-2,Part 7.4.2		
Stainless steel		
~~ECS1-3016N-A3S2~~	1	~~ECS2-3025N-A3S2~~
~~ECS1-3016N-B3S2~~	2	~~ECS2-3025N-B3S2~~
~~ECS1-3016P-A3S2~~	3	~~ECS2-3025P-A3S2~~
~~ECS1-3016P-B3S2~~	4	~~ECS2-3025P-B3S2~~
~~ECS1-3016P-S4S2~~	6	~~ECS2-3025P-S4S2~~
~~ECS1-3016N-S4S2~~	5	~~ECS2-3025N-S4S2~~
ECS1-3016C-A2S2	7	ECS2-3025C-A2S2
ECS1-3016C-B2S2	8	ECS2-3025C-B2S2
Please see Page 18 for details and specifications of DC 2-Wire models on this page.		
5.8⌀3x0.5		
Approx.22 g	Approx.22 g	

10-30VDC or 10-55VDC		
<10%		
<10mA		
200mA		
<0.01mA		
-		
-		
<1.5V		
150HZ	100HZ	
1ms/1ms	1ms/1ms	
<15%(Sr)		
<1.0%(Sr)		
IP67		
-25°C – +70°C		
<10%(Sr)		
YES		
220mA		
<10ms		
RFI>3V/m / EFT>1KV / ESD>4KV (contact)		
IEC 60947-5-2,Part 7.4.1 / IEC 60947-5-2,Part 7.4.2		
Stainless steel		
ECS1-3016N-ARU4	33	ECS2-3025N-ARU4
ECS1-3016N-BRU4	34	ECS2-3025N-BRU4
ECS1-3016P-ARU4	35	ECS2-3025P-ARU4
ECS1-3016P-BRU4	36	ECS2-3025P-BRU4
~~ECS1-3016P-SRU4~~	38	~~ECS2-3025P-SRU4~~
~~ECS1-3016N-SRU4~~	37	~~ECS2-3025N-SRU4~~
ECS1-3016C-ARU4	40	ECS2-3025C-ARU4
ECS1-3016C-BRU4	78	ECS2-3025C-BRU4
Approx.187 g	Approx.179 g	

Note:
Coming Soon : Part numbers with underline
In Preparation: Part numbers with a line through the middle

DC METAL FACE EXTENDED SENSING DISTANCE PROXIMITY SWITCH

M30		M30	
●	○	●	○
16 mm	25 mm	16 mm	25 mm
Stainless steel		Stainless steel	
●		●	

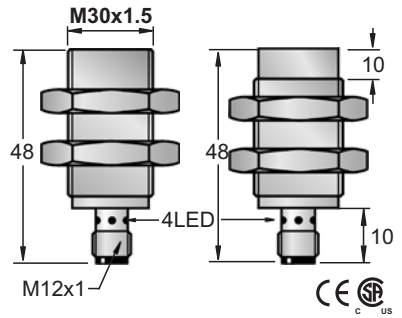

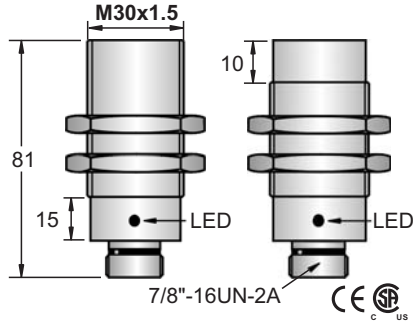

10-30VDC or 10-55VDC		10-30VDC or 10-55VDC	
<10%		<10%	
<10mA		<10mA	
200mA		200mA	
<0.01mA		<0.01mA	
-		-	
-		-	
<1.5V		<1.5V	
150HZ	100HZ	150HZ	100HZ
1ms/1ms	1ms/1ms	1ms/1ms	1ms/1ms
<15%(Sr)		<15%(Sr)	
<1.0%(Sr)		<1.0%(Sr)	
IP67		IP67	
-25°C – +70°C		-25°C – +70°C	
<10%(Sr)		<10%(Sr)	
YES		YES	
220mA		220mA	
<10ms		<10ms	
RFI>3V/m / EFT>1KV / ESD>4KV (contact)		RFI>3V/m / EFT>1KV / ESD>4KV (contact)	
IEC 60947-5-2,Part 7.4.1 / IEC 60947-5-2,Part 7.4.2		IEC 60947-5-2,Part 7.4.1 / IEC 60947-5-2,Part 7.4.2	
Stainless steel		Stainless steel	

ECS1-3016N-ARS4	33	ECS2-3025N-ARS4	ECS1-3016N-AZU4	41	ECS2-3025N-AZU4
ECS1-3016N-BRS4	34	ECS2-3025N-BRS4	ECS1-3016N-BZU4	42	ECS2-3025N-BZU4
ECS1-3016P-ARS4	35	ECS2-3025P-ARS4	ECS1-3016P-AZU4	43	ECS2-3025P-AZU4
ECS1-3016P-BRS4	36	ECS2-3025P-BRS4	ECS1-3016P-BZU4	44	ECS2-3025P-BZU4
~~ECS1-3016P-SRS4~~	38	~~ECS2-3025P-SRS4~~	~~ECS1-3016P-SZU4~~	46	~~ECS2-3025P-SZU4~~
~~ECS1-3016N-SRS4~~	37	~~ECS2-3025N-SRS4~~	~~ECS1-3016N-SZU4~~	45	~~ECS2-3025N-SZU4~~
ECS1-3016C-ARS4	40	ECS2-3025C-ARS4	ECS1-3016C-AZU4	47	ECS2-3025C-AZU4
ECS1-3016C-BRS4	78	ECS2-3025C-BRS4	ECS1-3016C-BZU4	79	ECS2-3025C-BZU4

Please see Page 18 for details and specifications of DC 2-Wire models on this page.

Approx.111 g	Approx.121 g	Approx.187 g	Approx.179 g

Note:
Coming Soon : Part numbers with underline
In Preparation: Part numbers with a line through the middle