DC RING TYPE INDUCTIVE SENSORS WITH ONE-SHOT FOR CONNECTOR

10mm	10mm	15mm
○	○	○
-	-	-
PBT	PBT	PBT
●	●	●
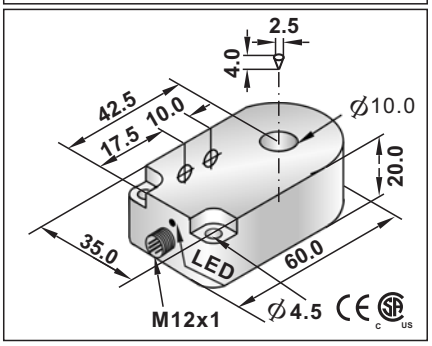	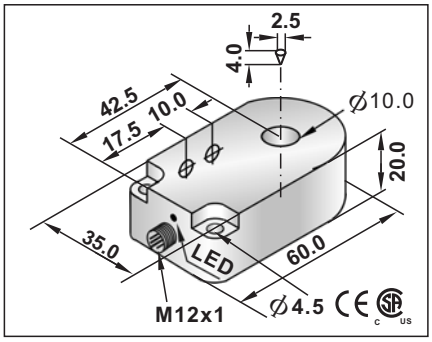	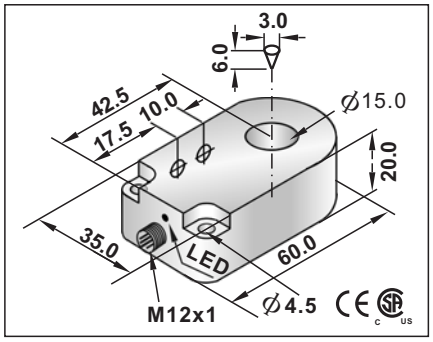
10~60VDC (Ripple≤10%)	10~30VDC (Ripple≤10%)	10~60VDC (Ripple≤10%)
105ms	105ms	105ms
≤1.8mA	≤15mA	≤1.8mA
100mA	≤200mA	100mA
≤1.8mA	≤10uA	≤1.8mA
-	-	-
3mA	-	3mA
<6V at 100mA	≤1.5V at 200mA	<6V at 100mA
8HZ	8HZ	8HZ
100ms	100ms	100ms
15%(Sr)	15%(Sr)	15%(Sr)
≤2% of Rated Operating Distance	≤2% of Rated Operating Distance	≤2% of Rated Operating Distance
IP67	IP67	IP67
-25°C to 70°C	-25°C to 70°C	-25°C to 70°C
±10%(Sr)	±10%(Sr)	±10%(Sr)
D=2.5mm;L=4mm	D=2.5mm;L=4mm	D=3mm;L=6mm
Yes	Yes	Yes
Yes	Yes	Yes
120~150mA	220~280mA	120~150mA
RFI>3V/m / EFT>1KV / ESD>4KV (contact)	RFI>3V/m / EFT>1KV / ESD>4KV (contact)	RFI>3V/m / EFT>1KV / ESD>4KV (contact)
IEC 60947-5-2,Part 7.4.1 / IEC 60947-5-2,Part 7.4.2	IEC 60947-5-2,Part 7.4.1 / IEC 60947-5-2,Part 7.4.2	IEC 60947-5-2,Part 7.4.1 / IEC 60947-5-2,Part 7.4.2
	RRP2-R1020N-ARU4/T 33	
	RRP2-R1020N-BRU4/T 34	
	RRP2-R1020P-ARU4/T 35	
	RRP2-R1020P-BRU4/T 36	
	RRP2-R1020P-SRU4/T 38	
	RRP2-R1020N-SRU4/T 37	
~~RRP2-R1020C-ARU4/T~~ 40		~~RRP2-R1520C-ARU4/T~~ 40
~~RRP2-R1020C-BRU4/T~~ 78		~~RRP2-R1520C-BRU4/T~~ 78
Please see Page 18 for details and specifications of DC 2-Wire models on this page.		
approx.50g	approx.50g	approx.48g

Note:
Coming Soon : Part numbers with underline
In Preparation: Part numbers with a line through the middle

DC RING TYPE INDUCTIVE SENSORS WITH ONE-SHOT FOR CONNECTOR

15mm	21mm	21mm
○	○	○
-	-	-
PBT	PBT	PBT
●	●	●
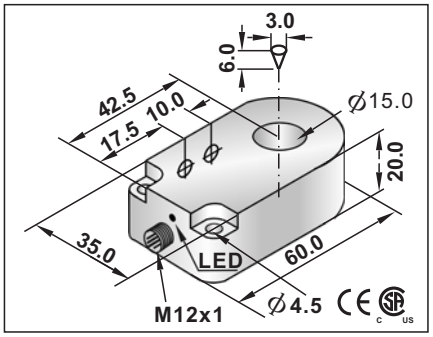	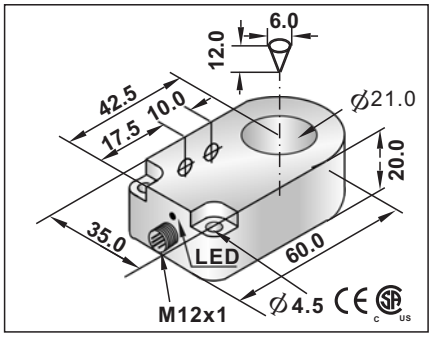	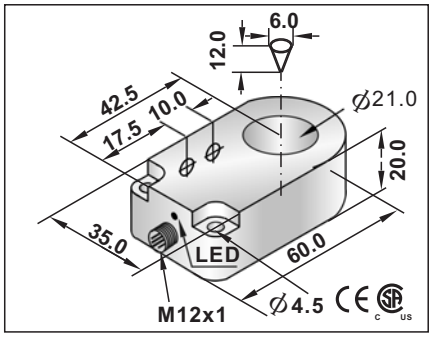
10~30VDC (Ripple≤10%)	10~60VDC (Ripple≤10%)	10~30VDC (Ripple≤10%)
105ms	105ms	105ms
≤15mA	≤1.8mA	≤15mA
≤200mA	100mA	≤200mA
≤10uA	≤1.2mA	≤10uA
-	-	-
-	3mA	-
≤1.5V at 200mA	<6V at 100mA	≤1.5V at 200mA
8HZ	8HZ	8HZ
100ms	100ms	100ms
15%(Sr)	15%(Sr)	15%(Sr)
≤2% of Rated Operating Distance	≤2% of Rated Operating Distance	≤2% of Rated Operating Distance
IP67	IP67	IP67
-25°C to 70°C	-25°C to 70°C	-25°C to 70°C
-	±10%(Sr)	±10%(Sr)
D=3mm;L=6mm	D=6mm;L=12mm	D=6mm;L=12mm
Yes	Yes	Yes
Yes	Yes	Yes
220~280mA	120~150mA	220~280mA
RFI>3V/m / EFT>1KV / ESD>4KV (contact)	RFI>3V/m / EFT>1KV / ESD>4KV (contact)	RFI>3V/m / EFT>1KV / ESD>4KV (contact)
IEC 60947-5-2,Part 7.4.1 / IEC 60947-5-2,Part 7.4.2	IEC 60947-5-2,Part 7.4.1 / IEC 60947-5-2,Part 7.4.2	IEC 60947-5-2,Part 7.4.1 / IEC 60947-5-2,Part 7.4.2
RRP2-R1520N-ARU4/T 33		RRP2-R2120N-ARU4/T 33
RRP2-R1520N-BRU4/T 34		RRP2-R2120N-BRU4/T 34
RRP2-R1520P-ARU4/T 35		RRP2-R2120P-ARU4/T 35
RRP2-R1520P-BRU4/T 36		RRP2-R2120P-BRU4/T 36
RRP2-R1520P-SRU4/T 45		RRP2-R2120P-SRU4/T 45
RRP2-R1520N-SRU4/T 46		RRP2-R2120N-SRU4/T 46
	RRP2-R2120C-ARU4/T 40	
	RRP2-R2120C-BRU4/T 78	
	Please see Page 18 for details and specifications of DC 2-Wire models on this page.	
approx.44g	approx.44g	approx.44g

Note:
Coming Soon : Part numbers with underline

DC RING TYPE INDUCTIVE SENSORS WITH ONE-SHOT FOR CONNECTOR

43mm	43mm	
○	○	
-	-	
PBT	PBT	
●	●	
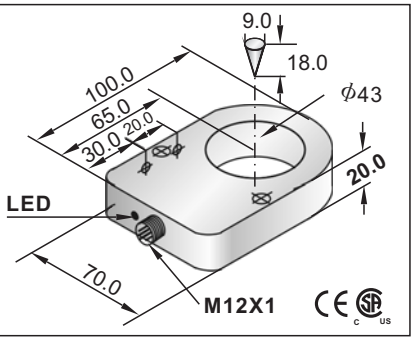	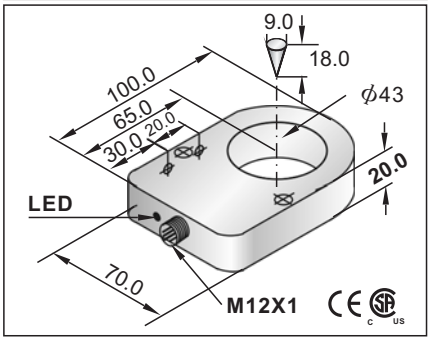	
10~60VDC (Ripple≤10%)	10~30VDC (Ripple≤10%)	
105ms	105ms	
≤1.8mA	≤15mA	
100mA	≤200mA	
≤1.2mA	≤10uA	
-	-	
3mA	-	
<6V at 100mA	≤1.5V at 200mA	
8HZ	8HZ	
100ms	100ms	
15%(Sr)	15%(Sr)	
≤2% of Rated Operating Distance	≤2% of Rated Operating Distance	
IP67	IP67	
-25°C to 70°C	-25°C to 70°C	
±10%(Sr)	±10%(Sr)	
D=9mm;L=18mm	D=9mm;L=18mm	
Yes	Yes	
Yes	Yes	
120~150mA	220~280mA	
RFI>3V/m / EFT>1KV / ESD>4KV (contact)	RFI>3V/m / EFT>1KV / ESD>4KV (contact)	
IEC 60947-5-2,Part 7.4.1 / IEC 60947-5-2,Part 7.4.2	IEC 60947-5-2,Part 7.4.1 / IEC 60947-5-2,Part 7.4.2	
	RRP2-R4320N-ARU4/T 33	
	RRP2-R4320N-BRU4/T 34	
	RRP2-R4320P-ARU4/T 35	
	RRP2-R4320P-BRU4/T 36	
	RRP2-R4320P-SRU4/T 38	
	RRP2-R4320N-SRU4/T 37	
RRP2-R4320C-ARU4/T 40		
RRP2-R4320C-BRU4/T 78		
Please see Page 18 for details and specifications of DC 2-Wire models on this page.		
approx.134g	approx.134g	

Note:
Coming Soon : Part numbers with underline