DC RING TYPE INDUCTIVE PROXIMITY SENSORS WITH ONE-SHOT

10mm	10mm	15mm
○	○	○
-	-	-
PBT	PBT	PBT
●	●	●
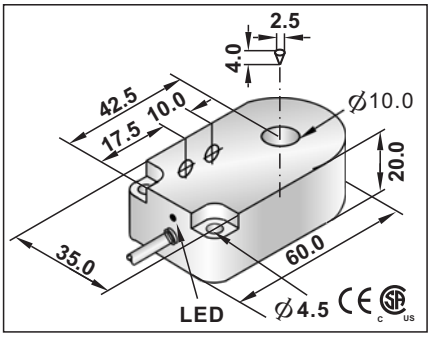	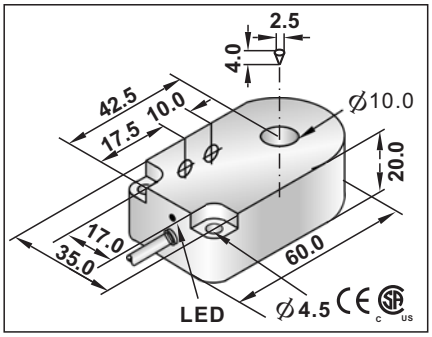	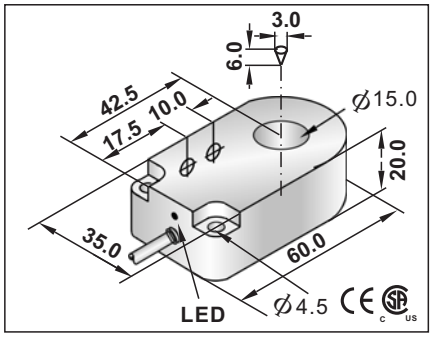
10~60VDC (Ripple≤10%)	10~30VDC (Ripple≤10%)	10~60VDC (Ripple≤10%)
105ms	105ms	105ms
≤1.8mA	≤15mA	≤1.8mA
100mA	≤200mA	100mA
≤1.8mA	≤10uA	≤1.8mA
-	-	-
3mA	-	3mA
<6V at 100mA	≤1.5V at 200mA	<6V at 100mA
8HZ	8HZ	8HZ
100ms	100ms	100ms
15%	15%	15%(Sr)
≤2% of Rated Operating Distance	≤2% of Rated Operating Distance	≤2% of Rated Operating Distance
IP67	IP67	IP67
-25℃ to 70℃	-25℃ to 70℃	-25℃ to 70℃
±10%(sr)	±10%(sr)	±10%
D=2.5mm;L=4mm	D=2.5mm;L=4mm	D=3mm;L=6mm
Yes	Yes	Yes
Yes	Yes	Yes
120~150mA	220~280mA	120~150mA
RFI>3V/m / EFT>1KV / ESD>4KV (contact)	RFI>3V/m / EFT>1KV / ESD>4KV (contact)	RFI>3V/m / EFT>1KV / ESD>4KV (contact)
IEC 60947-5-2,Part 7.4.1 / IEC 60947-5-2,Part 7.4.2	IEC 60947-5-2,Part 7.4.1 / IEC 60947-5-2,Part 7.4.2	IEC 60947-5-2,Part 7.4.1 / IEC 60947-5-2,Part 7.4.2
	RRP2-R1020N-A3U2/T 1	
	RRP2-R1020N-B3U2/T 2	
	RRP2-R1020P-A3U2/T 3	
	RRP2-R1020P-B3U2/T 4	
	RRP2-R1020P-S4U2/T 6	
	RRP2-R1020N-S4U2/T 5	
~~RRP2-R1020C-A2U2/T~~ 7		~~RRP2-R1520C-A2U2/T~~ 7
~~RRP2-R1020C-B2U2/T~~ 8		~~RRP2-R1520C-B2U2/T~~ 8
Please see Page 18 for details and specifications of DC 2-Wire models on this page.		
4∅ 2X0.34	4∅	4∅ 2X0.34
approx.97g	approx.97g	approx.92g

Note:
Coming Soon : Part numbers with underline
In Preparation: Part numbers with a line through the middle

DC RING TYPE INDUCTIVE PROXIMITY SENSORS WITH ONE-SHOT

15mm	21mm	21mm
○	○	○
-	-	-
PBT	PBT	PBT
●	●	●
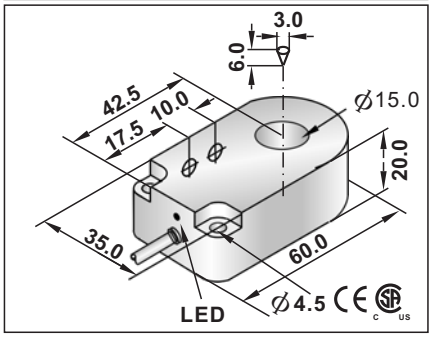	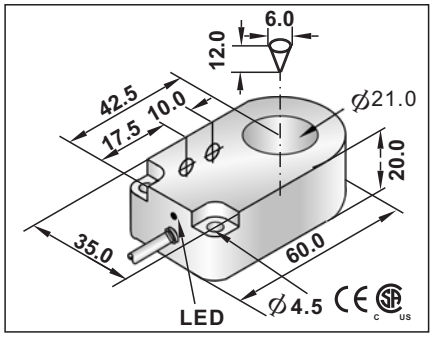	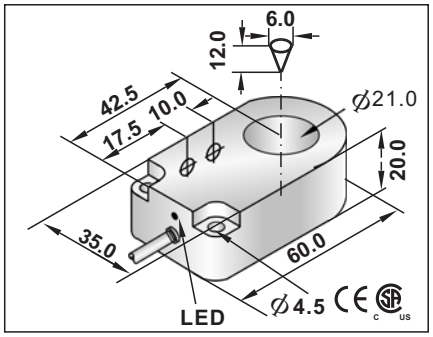
10~30VDC (Ripple≤10%)	10~60VDC (Ripple≤10%)	10~30VDC (Ripple≤10%)
105ms	105ms	105ms
≤15mA	≤1.8mA	≤15mA
≤200mA	100mA	≤200mA
≤10uA	≤1.2mA	≤10uA
-	-	-
-	3mA	-
≤1.5V at 200mA	<6V at 100mA	≤1.5V at 200mA
8HZ	8HZ	8HZ
100ms	100ms	100ms
15%(Sr)	15%(Sr)	15%(Sr)
≤2% of Rated Operating Distance	≤2% of Rated Operating Distance	≤2% of Rated Operating Distance
IP67	IP67	IP67
-25℃ to 70℃	-25℃ to 70℃	-25℃ to 70℃
-	±10%(Sr)	±10%(Sr)
D=3mm;L=6mm	D=6mm;L=12mm	D=6mm;L=12mm
Yes	Yes	Yes
Yes	Yes	Yes
220~280mA	120~150mA	220~280mA
RFI>3V/m / EFT>1KV / ESD>4KV (contact)	RFI>3V/m / EFT>1KV / ESD>4KV (contact)	RFI>3V/m / EFT>1KV / ESD>4KV (contact)
IEC 60947-5-2,Part 7.4.1 / IEC 60947-5-2,Part 7.4.2	IEC 60947-5-2,Part 7.4.1 / IEC 60947-5-2,Part 7.4.2	IEC 60947-5-2,Part 7.4.1 / IEC 60947-5-2,Part 7.4.2
RRP2-R1520N-A3U2/T 1		RRP2-R2120N-A3U2/T 1
RRP2-R1520N-B3U2/T 2		RRP2-R2120N-B3U2/T 2
RRP2-R1520P-A3U2/T 3		RRP2-R2120P-A3U2/T 3
RRP2-R1520P-B3U2/T 4		RRP2-R2120P-B3U2/T 4
RRP2-R1520P-S4U2/T 6		RRP2-R2120P-S4U2/T 6
RRP2-R1520N-S4U2/T 5		RRP2-R2120N-S4U2/T 5
	RRP2-R2120C-A2U2/T 7	
	RRP2-R2120C-B2U2/T 8	
	Please see Page 18 for details and specifications of DC 2-Wire models on this page.	
4∅	4∅ 2X0.34	4∅
approx.92g	approx.91	approx.91

Note:
Coming Soon : Part numbers with underline
In Preparation: Part numbers with a line through the middle

DC RING TYPE INDUCTIVE PROXIMITY SENSORS WITH ONE-SHOT

43mm	43mm	
○	○	
-	-	
PBT	PBT	
●	●	
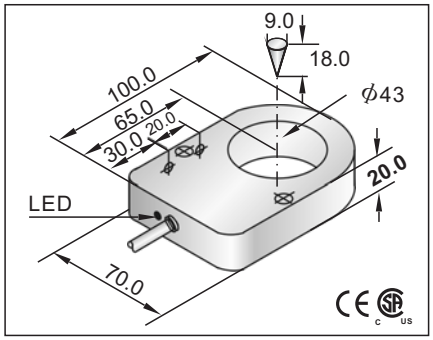	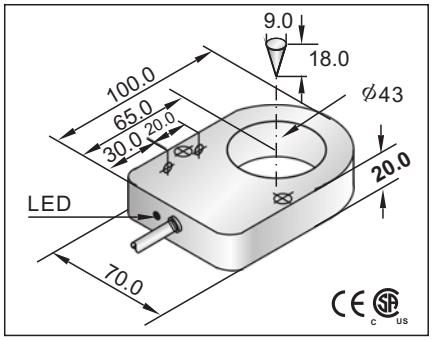	
10~60VDC (Ripple≤10%)	10~30VDC (Ripple≤10%)	
105ms	105ms	
≤1.8mA	≤15mA	
100mA	≤200mA	
≤1.2mA	≤10uA	
-	-	
3mA	-	
<6V at 100mA	≤1.5V at 200mA	
8HZ	8HZ	
100ms	100ms	
15%(Sr)	15%(Sr)	
≤2% of Rated Operating Distance	≤2% of Rated Operating Distance	
IP67	IP67	
-25℃ to 70℃	-25℃ to 70℃	
±10%(Sr)	±10%(Sr)	
D=9mm;L=18mm	D=9mm;L=18mm	
Yes	Yes	
Yes	Yes	
120~150mA	220~280mA	
RFI>3V/m / EFT>1KV / ESD>4KV (contact)	RFI>3V/m / EFT>1KV / ESD>4KV (contact)	
IEC 60947-5-2,Part 7.4.1 / IEC 60947-5-2,Part 7.4.2	IEC 60947-5-2,Part 7.4.1 / IEC 60947-5-2,Part 7.4.2	
	RRP2-R4320N-A3U2/T 1	
	RRP2-R4320N-B3U2/T 2	
	RRP2-R4320P-A3U2/T 3	
	RRP2-R4320P-B3U2/T 4	
	RRP2-R4320P-S4U2/T 6	
	RRP2-R4320N-S4U2/T 5	
~~RRP2-R4320C-A2U2/T~~ 7		
~~RRP2-R4320C-B2U2/T~~ 8		
Please see Page 18 for details and specifications of DC 2-Wire models on this page.		
5.8∅2X0.5	5.8∅	
approx.216g	approx.216g	

Note:
Coming Soon : Part numbers with underline
In Preparation: Part numbers with a line through the middle