AC/DC SLOT TYPE INDUCTIVE PROXIMITY SENSORS WITH CONNECTOR

10mm	15mm	30mm
○	○	○
-	-	-
PBT	PBT	PBT
●	●	●
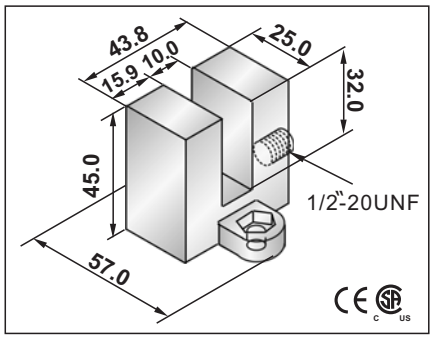	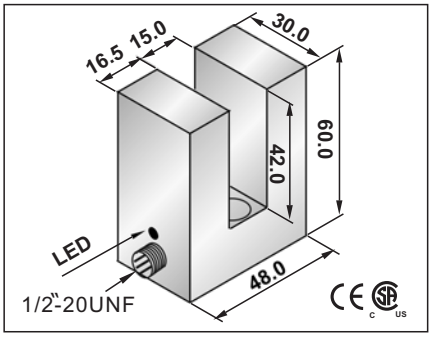	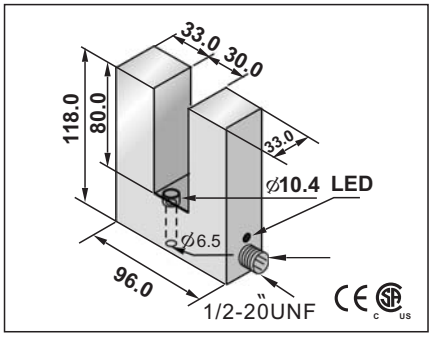
20~250VAC,50-60Hz;20~250VDC	20~250VAC,50-60Hz;20~250VDC	20~250VAC,50-60Hz;20~250VDC
-	-	-
<1.8mA	<1.8mA	<1.8mA
≤400mA	≤400mA	≤400mA
<1.8mA	<1.8mA	<1.8mA
5A at 20ms	5A at 20ms	5A at 20ms
≥5mA	≥5mA	≥5mA
<10V AC : <8V DC	<10V AC : <8V DC	<10V AC : <8V DC
25HZ AC ; 40Hz DC	25HZ AC ; 40Hz DC	25HZ AC ; 40Hz DC
Approx. 60% Insert depth	Approx. 60% Insert depth	Approx. 60% Insert depth
<15%(Sr)	<15%(Sr)	<15%(Sr)
<2.0%(Sr)	<2.0%(Sr)	<2.0%(Sr)
IP67	IP67	IP67
−25°C to 70°C	−25°C to 70°C	−25°C to 70°C
<±%10(Sr)	<±%10(Sr)	<±%10(Sr)
22mmx22mmx0.5mm	30mmx30mmx1mm	45mmx45mmx1mm
-	-	-
-	-	-
-	-	-
RFI>3V/m / EFT>1KV / ESD>4KV (contact)	RFI>3V/m / EFT>1KV / ESD>4KV (contact)	RFI>3V/m / EFT>1KV / ESD>4KV (contact)
IEC 60947-5-2,Part 7.4.1 / IEC 60947-5-2,Part 7.4.2	IEC 60947-5-2,Part 7.4.1 / IEC 60947-5-2,Part 7.4.2	IEC 60947-5-2,Part 7.4.1 / IEC 60947-5-2,Part 7.4.2
~~UUP2-U1032A-AUL3~~ 58	UUP2-U1542A-AUL3 58	UUP2-U3080A-AUL3 58
~~UUP2-U1032A-BUL3~~ 58	UUP2-U1542A-BUL3 58	UUP2-U3080A-BUL3 58
~~UUP2-U1032U-AUL3~~ 58	~~UUP2-U1542U-AUL3~~ 58	~~UUP2-U3080U-AUL3~~ 58
~~UUP2-U1032U-BUL3~~ 58	~~UUP2-U1542U-BUL3~~ 58	~~UUP2-U3080U-BUL3~~ 58
approx.68g	approx.100g	approx.200g

Note:
Coming Soon : Part numbers with underline
In Preparation: Part numbers with a line through the middle

AC/DC SLOT TYPE INDUCTIVE PROXIMITY SENSORS WITH CONNECTOR

30mm	
○	
-	
PBT	
●	
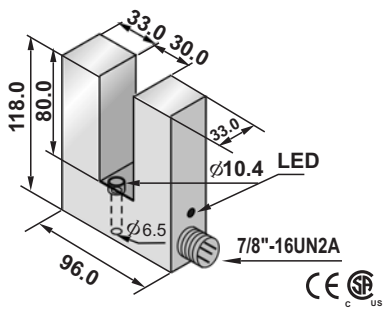	
20~250VAC,50-60Hz;20~250VDC	
-	
<1.8mA	
≤400mA	
<1.8mA	
5A at 20ms	
≥5mA	
<10V AC : <8V DC	
25HZ AC ; 40Hz DC	
Approx. 60% Insert depth	
<15%(Sr)	
<2.0%(Sr)	
IP67	
−25°C to 70°C	
<±%10(Sr)	
45mmx45mmx1mm	
-	
-	
-	
RFI>3V/m / EFT>1KV / ESD>4KV (contact)	
IEC 60947-5-2,Part 7.4.1 / IEC 60947-5-2,Part 7.4.2	

UUP2-U3080A-AZL3	66
UUP2-U3080A-BZL3	66
~~UUP2-U3080U-AZL3~~	66
~~UUP2-U3080U-BZL3~~	66

approx.200g	

Note:
Coming Soon : Part numbers with underline
In Preparation: Part numbers with a line through the middle