AC INDUCTIVE PLASTIC HOUSING PROXIMITY SWITCH CONNECTOR TYPE

M 12		M 18		M 18	
●	○	●	○	●	○
2 mm	4 mm	5 mm	8 mm	5 mm	8 mm
PBT RESIN		PBT RESIN		PBT RESIN	
●		●		●	

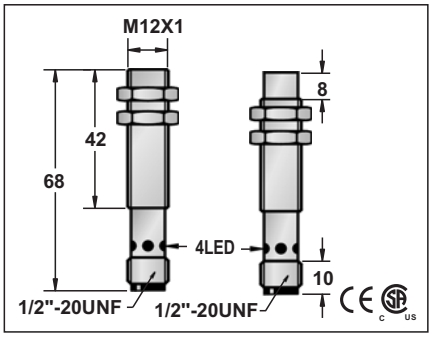

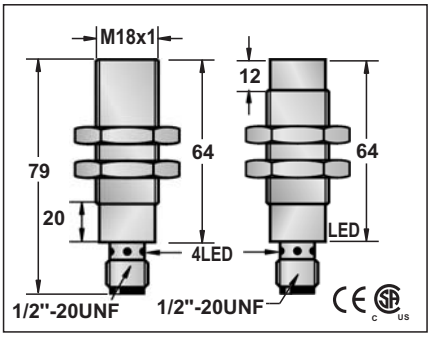

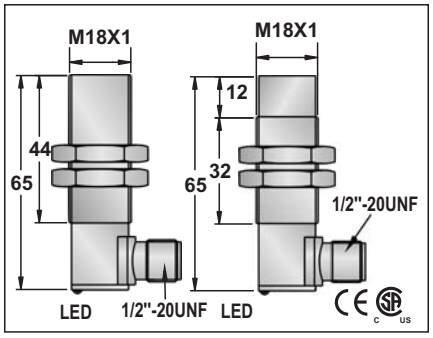

20-250VAC			20-250VAC			20-250VAC	
-			-			-	
<1.8mA			<1.8mA			<1.8mA	
400mA			400mA			400mA	
<1.8mA			<1.8mA			<1.8mA	
5A(20ms)			5A(20ms)			5A(20ms)	
5mA			5mA			5mA	
<8VAC AT 400MA			<8VAC AT 400MA			<8VAC AT 400MA	
<25HZ			<25HZ			<25HZ	
10ms/10ms			10ms/10ms			10ms/10ms	
<15%(Sr)			<15%(Sr)			<15%(Sr)	
<1.0%(Sr)			<1.0%(Sr)			<1.0%(Sr)	
IP67			IP67			IP67	
-25 °C - +70 °C			-25 °C - +70 °C			-25 °C - +70 °C	
<10%(Sr)			<10%(Sr)			<10%(Sr)	
NO			NO			NO	
-			-			-	
-			-			-	
RFI>3V/m / EFT>1KV / ESD>4KV (contact)			RFI>3V/m / EFT>1KV / ESD>4KV (contact)			RFI>3V/m / EFT>1KV / ESD>4KV (contact)	
IEC 60947-5-2,Part 7.4.1 / IEC 60947-5-2,Part 7.4.2			IEC 60947-5-2,Part 7.4.1 / IEC 60947-5-2,Part 7.4.2			IEC 60947-5-2,Part 7.4.1 / IEC 60947-5-2,Part 7.4.2	
POM		PBT	PBT			PBT	
FCP1-1202A-AUL3	58	FCP2-1204A-AUL3	FCP1-1805A-AUL3	58	FCP2-1808A-AUL3	FCP1-1805A-AUL3Y	58	FCP2-1808A-AUL3Y
FCP1-1202A-BUL3	58	FCP2-1204A-BUL3	FCP1-1805A-BUL3	58	FCP2-1808A-BUL3	FCP1-1805A-BUL3Y	58	FCP2-1808A-BUL3Y
			~~FCP1-1805A-CUL5~~	62	~~FCP2-1808A-CUL5~~	~~FCP1-1805A-CUL5Y~~	62	~~FCP2-1808A-CUL5Y~~
Approx.14 g			Approx.80 g			Approx.80 g	

Note:
In Preparation: Part numbers with a line through the middle

AC INDUCTIVE PLASTIC HOUSING PROXIMITY SWITCH CONNECTOR TYPE

M 18			ϕ20			M 30		
●	○		●	○		●	○	
5 mm	8 mm		8 mm	12 mm		10 mm	15 mm	
PBT RESIN			PBT RESIN			PBT RESIN		
●			●			●		
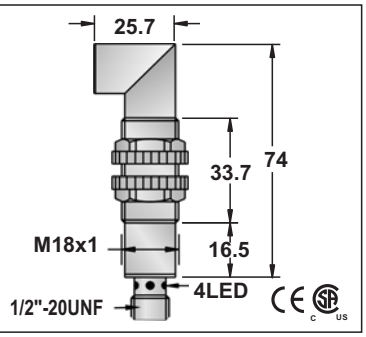			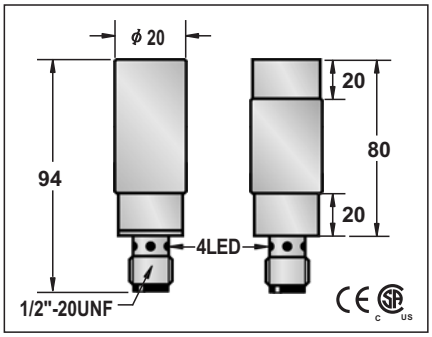			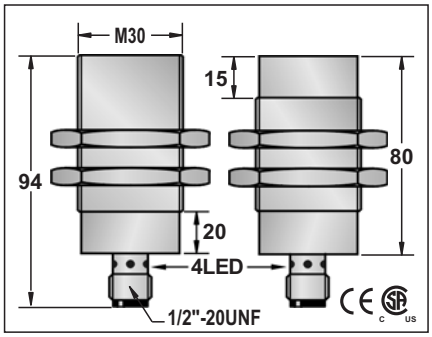		
20-250VAC			20-250VAC			20-250VAC		
-			-			-		
<1.8mA			<1.8mA			<1.8mA		
400mA			400mA			400mA		
<1.8mA			<1.8mA			<1.8mA		
5A(20ms)			5A(20ms)			5A(20ms)		
5mA			5mA			5mA		
<8VAC AT 400MA			<8VAC AT 400MA			<8VAC AT 400MA		
<25HZ			<25HZ			<25HZ		
10ms/10ms			10ms/10ms			10ms/10ms		
<15%(Sr)			<15%(Sr)			<15%(Sr)		
<1.0%(Sr)			<1.0%(Sr)			<1.0%(Sr)		
IP67			IP67			IP67		
-25 °C - +70 °C			-25 °C - +70 °C			-25 °C - +70 °C		
<10%(Sr)			<10%(Sr)			<10%(Sr)		
NO			NO			NO		
-			-			-		
-			-			-		
RFI>3V/m / EFT>1KV / ESD>4KV (contact)			RFI>3V/m / EFT>1KV / ESD>4KV (contact)			RFI>3V/m / EFT>1KV / ESD>4KV (contact)		
IEC 60947-5-2,Part 7.4.1 / IEC 60947-5-2,Part 7.4.2			IEC 60947-5-2,Part 7.4.1 / IEC 60947-5-2,Part 7.4.2			IEC 60947-5-2,Part 7.4.1 / IEC 60947-5-2,Part 7.4.2		
PBT			PBT			PBT		
FCP1-1805A-AUL3Z	58	FCP2-1808A-AUL3Z	FCP1-D2008A-AUL3	58	FCP2-D2012A-AUL3	FCP1-3010A-AUL3	58	FCP2-3015A-AUL3
FCP1-1805A-BUL3Z	58	FCP2-1808A-BUL3Z	FCP1-D2008A-BUL3	58	FCP2-D2012A-BUL3	FCP1-3010A-BUL3	58	FCP2-3015A-BUL3
~~FCP1-1805A-CUL5Z~~	62	~~FCP2-1808A-CUL5Z~~	~~FCP1-D2008A-CUL5~~	62	~~FCP2-D2012A-CUL5~~	~~FCP1-3010A-CUL5~~	62	~~FCP2-3015A-CUL5~~
Approx.14 g			Approx.90 g			Approx.120 g		

Note:
Coming Soon : Part numbers with underline
In Preparation: Part numbers with a line through the middle

AC INDUCTIVE PLASTIC HOUSING PROXIMITY SWITCH CONNECTOR TYPE

M 30			ϕ34			ϕ34		
●	○		●	○		●	○	
10 mm	15 mm		15 mm	20 mm		15 mm	20 mm	
PBT RESIN			PBT RESIN			PBT RESIN		
●			●			●		
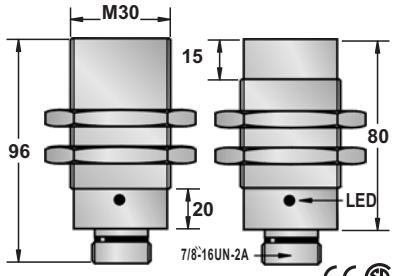			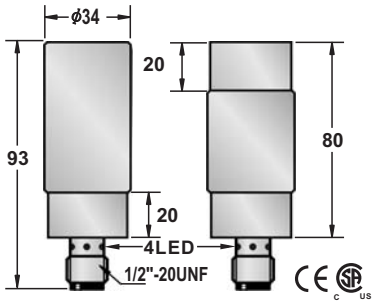			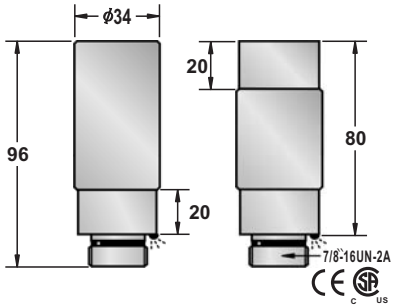		
20-250VAC			20-250VAC			20-250VAC		
-			-			-		
<1.8mA			<1.8mA			<1.8mA		
400mA			400mA			400mA		
<1.8mA			<1.8mA			<1.8mA		
5A(20ms)			5A(20ms)			5A(20ms)		
5mA			5mA			5mA		
<8VAC AT 400MA			<8VAC AT 400MA			<8VAC AT 400MA		
<25HZ			<25HZ			<25HZ		
10ms/10ms			10ms/10ms			10ms/10ms		
<15%(Sr)			<15%(Sr)			<15%(Sr)		
<1.0%(Sr)			<1.0%(Sr)			<1.0%(Sr)		
IP67			IP67			IP67		
-25°C - +70°C			-25°C - +70°C			-25°C - +70°C		
<10%(Sr)			<10%(Sr)			<10%(Sr)		
NO			NO			NO		
-			-			-		
-			-			-		
RFI>3V/m / EFT>1KV / ESD>4KV (contact)			RFI>3V/m / EFT>1KV / ESD>4KV (contact)			RFI>3V/m / EFT>1KV / ESD>4KV (contact)		
IEC 60947-5-2,Part 7.4.1 / IEC 60947-5-2,Part 7.4.2			IEC 60947-5-2,Part 7.4.1 / IEC 60947-5-2,Part 7.4.2			IEC 60947-5-2,Part 7.4.1 / IEC 60947-5-2,Part 7.4.2		
PBT			PBT			PBT		
FCP1-3010A-AZL2	66	FCP2-3015A-AZL2	FCP1-D3415A-AUL3	58	FCP2-D3420A-AUL3	FCP1-D3415A-AZL2	66	FCP2-D3420A-AZL2
FCP1-3010A-BZL2	66	FCP2-3015A-BZL2	FCP1-D3415A-BUL3	58	FCP2-D3420A-BUL3	FCP1-D3415A-BZL2	66	FCP2-D3420A-BZL2
~~FCP1-3010A-CZL4~~	69	~~FCP2-3015A-CZL4~~	~~FCP1-D3415A-CUL5~~	62	~~FCP2-D3420A-CUL5~~	~~FCP1-D3415A-CZL4~~	69	~~FCP2-D3420A-CZL4~~
Approx.120 g			Approx.162 g			Approx.162 g		

Note:
Coming Soon : Part numbers with underline
In Preparation: Part numbers with a line through the middle