DC CAPACITIVE PLASTIC HOUSING CONNECTOR TYPE

M12	
●	○
1-4 mm adjustable	**1-8 mm** adjustable
PBT RESIN	
●	

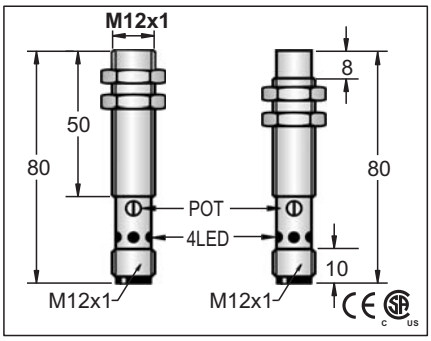

M18	
●	○
2-8 mm adjustable	**2-15 mm** adjustable
PBT RESIN	
●	

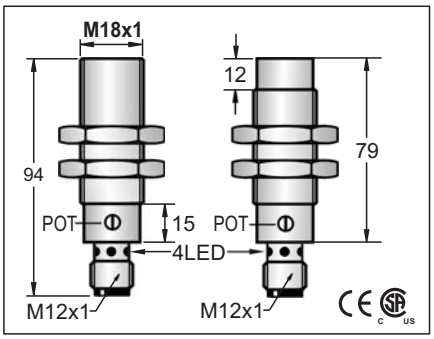

ϕ20	
●	○
2-10 mm adjustable	**2-20 mm** adjustable
PBT RESIN	
●	

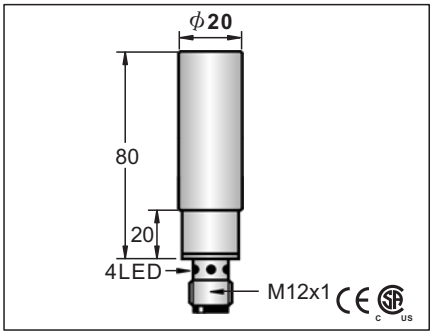

10-30VDC		
<10%		
10mA		
200mA		
< .01mA		
-		
-		
<2 VDC		
100HZ		
1.5ms/1.5ms		
<15%(Sr)		
<5%(Sr)		
IP67		
-25°C– +70°C		
<10%(Sr)		
YES		
220mA		
<25ms		
RFI>3V/m / EFT>1KV / ESD>4KV (contact)		
IEC 60947-5-2,Part 7.4.1 / IEC 60947-5-2,Part 7.4.2		
POM		PBT
CCP1-1204N-ARU4	33	CCP2-1208N-ARU4
CCP1-1204N-BRU4	34	CCP2-1208N-BRU4
CCP1-1204P-ARU4	35	CCP2-1208P-ARU4
CCP1-1204P-BRU4	36	CCP2-1208P-BRU4
CCP1-1204P-SRU4	38	CCP2-1208P-SRU4
CCP1-1204N-SRU4	37	CCP2-1208N-SRU4
approx.14g		

10-30VDC		
<10%		
10mA		
200mA		
< .01mA		
-		
-		
<2 VDC		
100HZ		
1.5ms/1.5ms		
<15%(Sr)		
<5%(Sr)		
IP67		
-25°C– +70°C		
<10%(Sr)		
YES		
350mA		
<25ms		
RFI>3V/m / EFT>1KV / ESD>4KV (contact)		
IEC 60947-5-2,Part 7.4.1 / IEC 60947-5-2,Part 7.4.2		
PBT		
CCP1-1808N-ARU4	33	CCP2-1815N-ARU4
CCP1-1808N-BRU4	34	CCP2-1815N-BRU4
CCP1-1808P-ARU4	35	CCP2-1815P-ARU4
CCP1-1808P-BRU4	36	CCP2-1815P-BRU4
*CCP1-1808P-SRU4	38	*CCP2-1815P-SRU4
*CCP1-1808N-SRU4	37	*CCP2-1815N-SRU4
* Total length is 91.5mm for changover tyde		
approx.79g		approx.80g

10-30VDC		
<10%		
<10mA		
300mA		
<0.01mA		
-		
-		
<2 VDC		
100HZ		
1.5ms/1.5ms		
<15%(Sr)		
<5%(Sr)		
IP67		
-25°C– +70°C		
<10%(Sr)		
YES		
350mA		
<25ms		
RFI>3V/m / EFT>1KV / ESD>4KV (contact)		
IEC 60947-5-2,Part 7.4.1 / IEC 60947-5-2,Part 7.4.2		
PBT		
CCP1-D2010N-ARU4	33	CCP2-D2020N-ARU4
CCP1-D2010N-BRU4	34	CCP2-D2020N-BRU4
CCP1-D2010P-ARU4	35	CCP2-D2020P-ARU4
CCP1-D2010P-BRU4	36	CCP2-D2020P-BRU4
CCP1-D2010P-SRU4	38	CCP2-D2020P-SRU4
CCP1-D2010N-SRU4	37	CCP2-D2020N-SRU4
approx.57g		

Note:
Coming Soon : Part numbers with underline

DC CAPACITIVE PLASTIC HOUSING CONNECTOR TYPE

M30		M30		ϕ34	
●	○	●	○	●	○
2-20 mm adjustable	**2-30 mm** adjustable	**2-20 mm** adjustable	**2-30 mm** adjustable	**2-25 mm** adjustable	**2-35 mm** adjustable
PBT RESIN		PBT RESIN		PBT RESIN	
●		●		●	

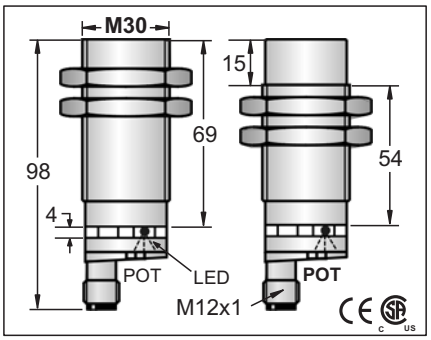

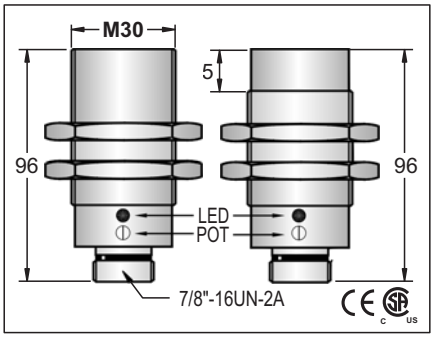

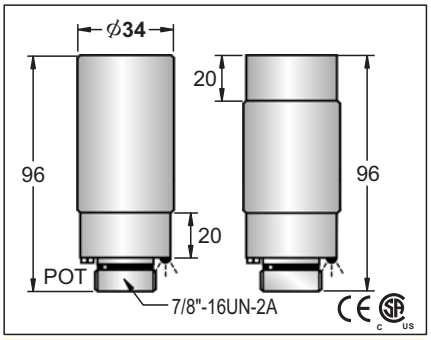

10-30VDC	10-30VDC	10-30VDC
<10%	<10%	<10%
<10m A	<10m A	<10m A
300mA	300m A	300mA
<0.01m A	<0.01m A	<0.01m A
-	-	-
-	-	-
<2 VDC	<2 VDC	<2 VDC
100HZ	100HZ	100HZ
1.5ms/1.5ms	1.5ms/1.5ms	1.5ms/1.5ms
<15%(Sr)	<15%(Sr)	<15%(Sr)
<5%(Sr)	<5%(Sr)	<5%(Sr)
IP67	IP67	IP67
-25°C—+70°C	-25°C—+70°C	-25°C—+70°C
<10%(Sr)	<10%(Sr)	<10%(Sr)
YES	YES	YES
350mA	350mA	350mA
<25ms	<25ms	<25ms
RFI>3V/m / EFT>1KV / ESD>4KV (contact)	RFI>3V/m / EFT>1KV / ESD>4KV (contact)	RFI>3V/m / EFT>1KV / ESD>4KV (contact)
IEC 60947-5-2,Part 7.4.1 / IEC 60947-5-2,Part 7.4.2	IEC 60947-5-2,Part 7.4.1 / IEC 60947-5-2,Part 7.4.2	IEC 60947-5-2,Part 7.4.1 / IEC 60947-5-2,Part 7.4.2
PBT	PBT	PBT

CCP1-3020N-ARU4	33	CCP2-3030N-ARU4
CCP1-3020N-BRU4	34	CCP2-3030N-BRU4
CCP1-3020P-ARU4	35	CCP2-3030P-ARU4
CCP1-3020P-BRU4	36	CCP2-3030P-BRU4
CCP1-3020P-SRU4	38	CCP2-3030P-SRU4
CCP1-3020N-SRU4	37	CCP2-3030N-SRU4

CCP1-3020N-AZU4	41	CCP2-3030N-AZU4
CCP1-3020N-BZU4	42	CCP2-3030N-BZU4
CCP1-3020P-AZU4	43	CCP2-3030P-AZU4
CCP1-3020P-BZU4	44	CCP2-3030P-BZU4
CCP1-3020P-SZU4	46	CCP2-3030P-SZU4
CCP1-3020N-SZU4	45	CCP2-3030N-SZU4

CCP1-D3425N-AZU4	41	CCP2-D3435N-AZU4
CCP1-D3425N-BZU4	42	CCP2-D3435N-BZU4
CCP1-D3425P-AZU4	43	CCP2-D3435P-AZU4
CCP1-D3425P-BZU4	44	CCP2-D3435P-BZU4
CCP1-D3425P-SZU4	46	CCP2-D3435P-SZU4
CCP1-D3425N-SZU4	45	CCP2-D3435N-SZU4

approx.103g	approx.120g	approx.103g	approx.120g	approx.162g

DC CAPACITIVE PLASTIC HOUSING CONNECTOR TYPE

ϕ 34	
●	○
2-25 mm adjustable	**2-35 mm** adjustable
PBT RESIN	
●	

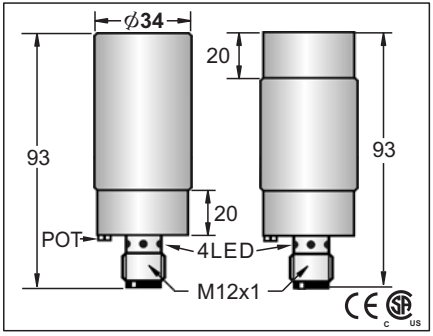

10-30VDC
<10%
<10m A
300m A
<0.01m A
-
-
<2 VDC
100Hz
1.5ms/1.5ms
<15%(Sr)
<5%(Sr)
IP67
-25°C — +70°C
<10%(Sr)
YES
350mA
<25m s
RFI>3V/m / EFT>1KV / ESD>4KV (contact)
IEC 60947-5-2,Part 7.4.1 / IEC 60947-5-2,Part 7.4.2
PBT

CCP1-D3425N-ARU4	33	CCP2-D3435N-ARU4
CCP1-D3425N-BRU4	34	CCP2-D3435N-BRU4
CCP1-D3425P-ARU4	35	CCP2-D3435P-ARU4
CCP1-D3425P-BRU4	36	CCP2-D3435P-BRU4
CCP1-D3425P-SRU4	38	CCP2-D3435P-SRU4
CCP1-D3425N-SRU4	37	CCP2-D3435N-SRU4

approx.162g