DC LONG SENSING DISTANCE PROXIMITY SWITCH

ϕ6.5		M 8		Q8	
●	○	●	○	●	●
3 mm	6 mm	3 mm	6 mm	3 mm	
Stainless steel or nickel plated brass		Stainless steel or nickel plated brass		die-cast	
●		●		●	

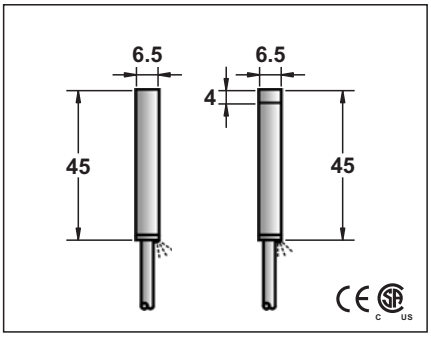

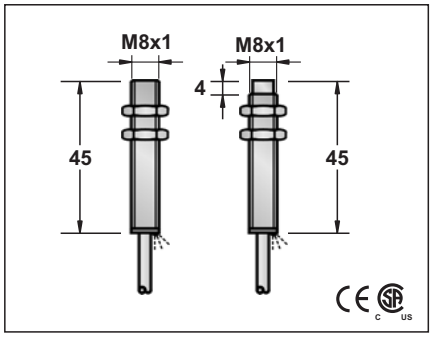

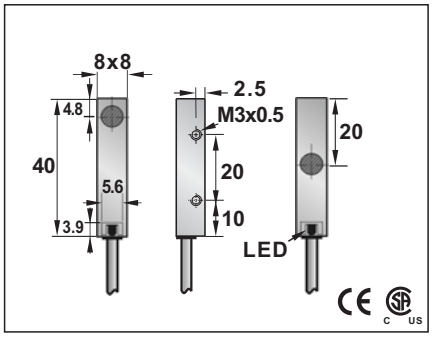

10-30VDC			10-30VDC			10-30VDC		
<10%			<10%			<10%		
<10mA			<10mA			<10mA		
200mA			200mA			200mA		
<0.01mA			<0.01mA			<0.01mA		
-			-			-		
-			-			-		
<2.0V			<2.0V			<2.0V		
1KHZ			1KHZ			1KHZ		
0.1ms/0.1ms			0.1ms/0.1ms			0.1ms/0.1ms		
<15%(Sr)			<15%(Sr)			<15%(Sr)		
<2.0%(Sr)			<2.0%(Sr)			<2.0%(Sr)		
IP67			IP67			IP67		
-25°C - +70°C			-25°C - +70°C			-25°C - +70°C		
<10%(Sr)			<10%(Sr)			<10%(Sr)		
YES			YES			YES		
220mA			220mA			220mA		
<10ms			<10ms			<10ms		
RFI>3V/m / EFT>1KV / ESD>4KV (contact)			RFI>3V/m / EFT>1KV / ESD>4KV (contact)			RFI>3V/m / EFT>1KV / ESD>4KV (contact)		
IEC 60947-5-2,Part 7.4.1 / IEC 60947-5-2,Part 7.4.2			IEC 60947-5-2,Part 7.4.1 / IEC 60947-5-2,Part 7.4.2			IEC 60947-5-2,Part 7.4.1 / IEC 60947-5-2,Part 7.4.2		
POM			POM			POM		
LCM1-D0603N-A3U2	1	LCM2-D0606N-A3U2	LCM1-0803N-A3U2	1	LCM2-0806N-A3U2	LQM1-8803N-A3U2T	1	LQM1-8803N-A3U2M
LCM1-D0603N-B3U2	2	LCM2-D0606N-B3U2	LCM1-0803N-B3U2	2	LCM2-0806N-B3U2	LQM1-8803N-B3U2T	2	LQM1-8803N-B3U2M
LCM1-D0603P-A3U2	3	LCM2-D0606P-A3U2	LCM1-0803P-A3U2	3	LCM2-0806P-A3U2	LQM1-8803P-A3U2T	3	LQM1-8803P-A3U2M
LCM1-D0603P-B3U2	4	LCM2-D0606P-B3U2	LCM1-0803P-B3U2	4	LCM2-0806P-B3U2	LQM1-8803P-B3U2T	4	LQM1-8803P-B3U2M
LCM1-D0603NU	21	LCM2-D0606NU	LCM1-0803NU	21	LCM2-0806NU	LQM1-8803NUT	21	LQM1-8803NUM
						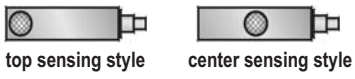	
						top sensing style	center sensing style	
3ϕ3x0.15			3ϕ3x0.15			3ϕ3X0.15		
Approx.36 g			Approx.40 g			Approx.38 g		

Note:
Coming Soon : Part numbers with underline

DC LONG SENSING DISTANCE PROXIMITY SWITCH

ϕ11		M 12		Q 12
●	○	●	○	●
6 mm	10 mm	6 mm	10 mm	6 mm
nickel plated brass		nickel plated brass		die-cast
●		●		●

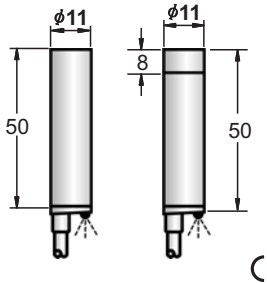

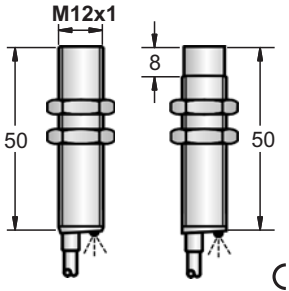

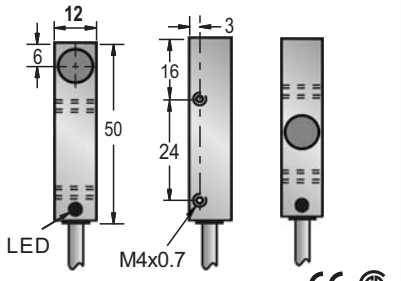

ϕ11		M 12		Q 12
10-30VDC		10-30VDC or 10-60VDC		10-30VDC or 10-60VDC
<10%		<10%		<10%
<10mA		<10mA		<10mA
200mA		200mA		200mA
<0.01mA		<0.01mA		<0.01mA
-		-		-
-		-		-
<2V		<2V		<2.0V
1KHZ	500HZ	1KHZ	500HZ	1KHZ
0.1ms/0.1ms	0.2ms/0.2ms	0.1ms/0.1ms	0.2ms/0.2ms	0.1ms/0.1ms
<15%(Sr)		<15%(Sr)		<15%(Sr)
<2.0%(Sr)		<2.0%(Sr)		<2.0%(Sr)
IP67		IP67		IP67
-25°C - +70°C		-25°C - +70°C		-25°C - +70°C
<10%(Sr)		<10%(Sr)		<10%(Sr)
YES		YES		YES
220mA		220mA		220mA
<10ms		<10ms		<10ms
RFI>3V/m / EFT>1KV / ESD>4KV (contact)		RFI>3V/m / EFT>1KV / ESD>4KV (contact)		RFI>3V/m / EFT>1KV / ESD>4KV (contact)
IEC 60947-5-2,Part 7.4.1 / IEC 60947-5-2,Part 7.4.2		IEC 60947-5-2,Part 7.4.1 / IEC 60947-5-2,Part 7.4.2		IEC 60947-5-2,Part 7.4.1 / IEC 60947-5-2,Part 7.4.2
POM		POM	PBT	POM

LCM1-D1106N-A3U2	1	LCM2-D1110N-A3U2	LCM1-1206N-A3U2	1	LCM2-1210N-A3U2	LQM1-1206N-A3U2T	1	LQM1-1206N-A3U2M
LCM1-D1106N-B3U2	2	LCM2-D1110N-B3U2	LCM1-1206N-B3U2	2	LCM2-1210N-B3U2	LQM1-1206N-B3U2T	2	LQM1-1206N-B3U2M
LCM1-D1106P-A3U2	3	LCM2-D1110P-A3U2	LCM1-1206P-A3U2	3	LCM2-1210P-A3U2	LQM1-1206P-A3U2T	3	LQM1-1206P-A3U2M
LCM1-D1106P-B3U2	4	LCM2-D1110P-B3U2	LCM1-1206P-B3U2	4	LCM2-1210P-B3U2	LQM1-1206P-B3U2T	4	LQM1-1206P-B3U2M
LCM1-D1106P-S4U2		LCM2-D1110P-S4U2	LCM1-1206P-S4U2	6	LCM2-1210P-S4U2	LQM1-1206P-S4U2T	6	LQM1-1206P-S4U2M
LCM1-D1106N-S4U2		LCM2-D1110N-S4U2	LCM1-1206N-S4U2	5	LCM2-1210N-S4U2	LQM1-1206N-S4U2T	5	LQM1-1206N-S4U2M
LCM1-D1106C-A2U2	7	LCM2-D1110C-A2U2	LCM1-1206C-A2U2	7	LCM2-1210C-A2U2	LQM1-1206C-A2U2T	7	LQM1-1206C-A2U2M
LCM1-D1106C-B2U2	8	LCM2-D1110C-B2U2	LCM1-1206C-B2U2	8	LCM2-1210C-B2U2	LQM1-1206C-B2U2T	8	LQM1-1206C-B2U2M
LCM1-D1106NU	21	LCM2-D1110NU	LCM1-1206NU	21	LCM2-1210NU	LQM1-1206NUT	8	LQM1-1206NUM

Please see Page 18 for details and specifications of DC 2-Wire models on this page.

top sensing style

center sensing style

ϕ11		M 12		Q 12
4ϕ3x0.15		4ϕ3x0.15		4ϕ3X0.34
Approx.56 g	Approx.55 g	Approx.56 g	Approx.55 g	Approx.75 g

Note:
Coming Soon : Part numbers with underline

DC LONG SENSING DISTANCE PROXIMITY SWITCH

M 18		M 30	
●	○	●	○
12 mm	20 mm	22 mm	40 mm
nickel plated brass		nickel plated brass	
●		●	

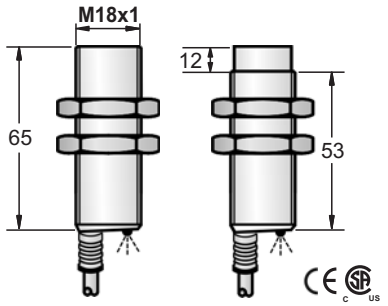

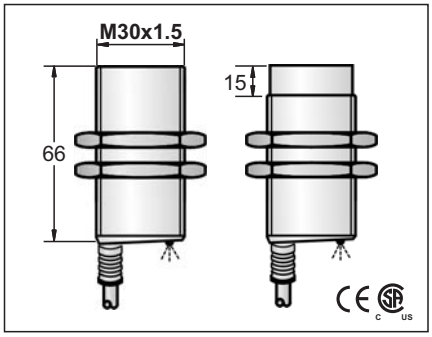

M 18		M 30	
10-30VDC or 10-60VDC		10-30VDC or 10-60VDC	
<10%		<10%	
<10mA		<10mA	
200mA		200mA	
<0.05mA		<0.05mA	
-		-	
-		-	
<2V		<2V	
300HZ	100HZ	300HZ	100HZ
0.5ms/0.5ms	1ms/1ms	0.5ms/0.5ms	1ms/1ms
<15%(Sr)		<15%(Sr)	
<2.0%(Sr)		<2.0%(Sr)	
IP67		IP67	
-25°C - +70°C		-25°C - +70°C	
<10%(Sr)		<10%(Sr)	
YES		YES	
220mA		220mA	
<10ms		<10ms	
RFI>3V/m / EFT>1KV / ESD>4KV (contact)		RFI>3V/m / EFT>1KV / ESD>4KV (contact)	
IEC 60947-5-2,Part 7.4.1 / IEC 60947-5-2,Part 7.4.2		IEC 60947-5-2,Part 7.4.1 / IEC 60947-5-2,Part 7.4.2	
PBT		PBT	

LCM1-1812N-A3U2	1	LCM2-1820N-A3U2	LCM1-3022N-A3U2	1	LCM2-3040N-A3U2
LCM1-1812N-B3U2	2	LCM2-1820N-B3U2	LCM1-3022N-B3U2	2	LCM2-3040N-B3U2
LCM1-1812P-A3U2	3	LCM2-1820P-A3U2	LCM1-3022P-A3U2	3	LCM2-3040P-A3U2
LCM1-1812P-B3U2	4	LCM2-1820P-B3U2	LCM1-3022P-B3U2	4	LCM2-3040P-B3U2
LCM1-1812P-S4U2	6	LCM2-1820P-S4U2	LCM1-3022P-S4U2	6	LCM2-3040P-S4U2
LCM1-1812N-S4U2	5	LCM2-1820N-S4U2	LCM1-3022N-S4U2	5	LCM2-3040N-S4U2
LCM1-1812C-A2U2	7	LCM2-1820C-A2U2	LCM1-3022C-A2U2	7	LCM2-3040C-A2U2
LCM1-1812C-B2U2	8	LCM2-1820C-B2U2	LCM1-3022C-B2U2	8	LCM2-3040C-B2U2
LCM1-1812NU	8	LCM2-1820NU	LCM1-3022NU	8	LCM2-3040NU

Please see Page 18 for details and specifications of DC 2-Wire models on this page.

M 18		M 30	
5.0 ϕ44x0.1		5.8ϕ3x0.5	
Approx.110 g	Approx.114 g	Approx.231 g	Approx.241 g

Note:
Coming Soon : Part numbers with underline