DC STANDARD BODY WITH EXTENDED SENSING DISTANCE PROXIMITY SWITCH

ϕ6.5			ϕ8			M8		
●	○		●	○		●	○	
2 mm	4 mm		2 mm	4 mm		2 mm	4 mm	
stainless steel			stainless steel			stainless steel		
●			●			●		
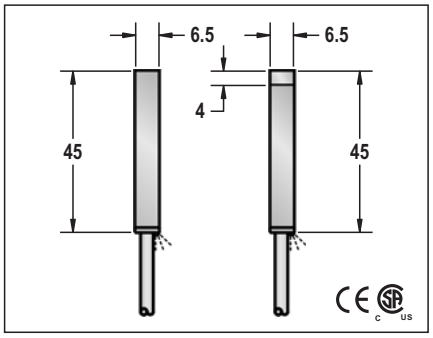			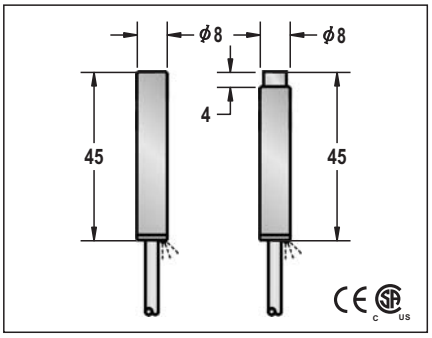			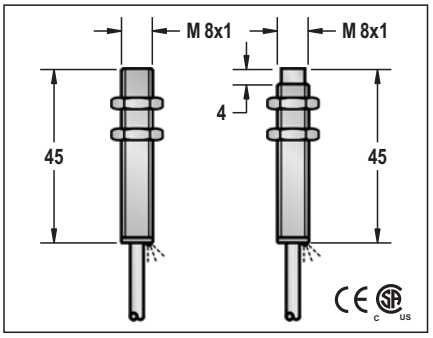		
10-30VDC			10-30VDC			10-30VDC		
<10%			<10%			<10%		
<10mA			<10mA			<10mA		
200mA			200mA			200mA		
<0.01mA			<0.01mA			<0.01mA		
-			-			-		
-			-			-		
<1.5V			<1.5V			<1.5V		
2KHZ	1KHZ		2KHZ	1KHZ		2KHZ	1KHZ	
0.1ms/0.1ms	0.2ms/0.2ms		0.1ms/0.1ms	0.2ms/0.2ms		0.1ms/0.1ms	0.2ms/0.2ms	
<15%			<15%			<15%		
<1.0%(Sr)			<1.0%(Sr)			<1.0%(Sr)		
IP67			IP67			IP67		
-25 °C - +70 °C			-25 °C - +70 °C			-25 °C - +70 °C		
<10%(Sr)			<10%(Sr)			<10%(Sr)		
YES			YES			YES		
220mA			220mA			220mA		
<10ms			<10ms			<10ms		
RFI>3V/m / EFT>1KV / ESD>4KV (contact)			RFI>3V/m / EFT>1KV / ESD>4KV (contact)			RFI>3V/m / EFT>1KV / ESD>4KV (contact)		
IEC 60947-5-2,Part 7.4.1 / IEC 60947-5-2,Part 7.4.2			IEC 60947-5-2,Part 7.4.1 / IEC 60947-5-2,Part 7.4.2			IEC 60947-5-2,Part 7.4.1 / IEC 60947-5-2,Part 7.4.2		
POM			POM			POM		
ECU1-D0602N-A3U2	1	ECU2-D0604N-A3U2	ECU1-D0802N-A3U2	1	ECU2-D0804N-A3U2	ECU1-0802N-A3U2	1	ECU2-0804N-A3U2
ECU1-D0602N-B3U2	2	ECU2-D0604N-B3U2	ECU1-D0802N-B3U2	2	ECU2-D0804N-B3U2	ECU1-0802N-B3U2	2	ECU2-0804N-B3U2
ECU1-D0602P-A3U2	3	ECU2-D0604P-A3U2	ECU1-D0802P-A3U2	3	ECU2-D0804P-A3U2	ECU1-0802P-A3U2	3	ECU2-0804P-A3U2
ECU1-D0602P-B3U2	4	ECU2-D0604P-B3U2	ECU1-D0802P-B3U2	4	ECU2-D0804P-B3U2	ECU1-0802P-B3U2	4	ECU2-0804P-B3U2
ECU1-D0602P-S4U2	6	ECU2-D0604P-S4U2	ECU1-D0802P-S4U2	6	ECU2-D0804P-S4U2	ECU1-0802P-S4U2	6	ECU2-0804P-S4U2
ECU1-D0602N-S4U2	5	ECU2-D0604N-S4U2	ECU1-D0802N-S4U2	5	ECU2-D0804N-S4U2	ECU1-0802N-S4U2	5	ECU2-0804N-S4U2
ECU1-D0602C-A2U2	7	ECU2-D0604C-A2U2	ECU1-D0802C-A2U2	7	ECU2-D0804C-A2U2	ECU1-0802C-A2U2	7	ECU2-0804C-A2U2
ECU1-D0602C-B2U2	8	ECU2-D0604C-B2U2	ECU1-D0802C-B2U2	8	ECU2-D0804C-B2U2	ECU1-0802C-B2U2	8	ECU2-0804C-B2U2
			Please see Page 18 for details and specifications of DC 2-Wire models on this page.					
3ϕ3x0.15			3ϕ3x0.15			3ϕ3x0.15		
Approx.36 g			Approx.38 g			Approx.40 g		

DC STANDARD BODY WITH EXTENDED SENSING DISTANCE PROXIMITY SWITCH

Q8	ϕ11		M12	
●	●	○	●	○
2 mm	4 mm	8 mm	4 mm	8mm
die-cast	nickel plated brass		nickel plated brass	
●	●		●	

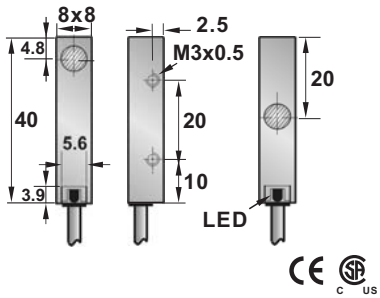

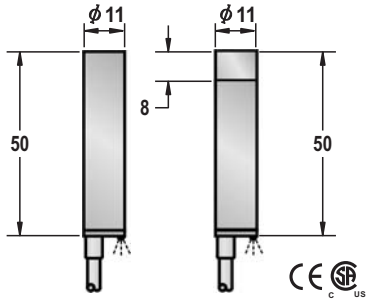

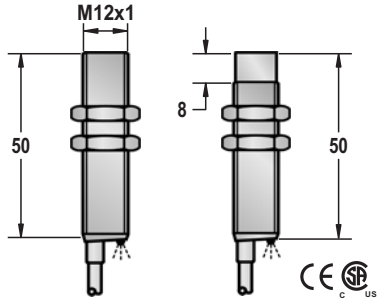

Q8	ϕ11		M12	
10-30VDC	10-30VDC		10-30VDC	
<10%	<10%		<10%	
<10mA	<10mA		<10mA	
200mA	200mA		200mA	
<0.01mA	<0.01mA		<0.01mA	
-	-		-	
-	-		-	
<1.5V	<1.5V		<1.5V	
2KHZ	2KHZ	1KHZ	2KHZ	1KHZ
0.1ms/0.1ms	0.1ms/0.1ms	0.2ms/0.2ms	0.1ms/0.1ms	0.2ms/0.2ms
<15%(Sr)	<15%		<15%	
<1.0%(Sr)	<1.0%(Sr)		<1.0%(Sr)	
IP67	IP67		IP67	
-25°C - +70°C	-25°C - +70°C		-25°C - +70°C	
<10%(Sr)	<10%(Sr)		<10%(Sr)	
YES	YES		YES	
220mA	220mA		220mA	
<10ms	<10ms		<10ms	
RFI>3V/m / EFT>1KV / ESD>4KV (contact)	RFI>3V/m / EFT>1KV / ESD>4KV (contact)		RFI>3V/m / EFT>1KV / ESD>4KV (contact)	
IEC 60947-5-2,Part 7.4.1 / IEC 60947-5-2,Part 7.4.2	IEC 60947-5-2,Part 7.4.1 / IEC 60947-5-2,Part 7.4.2		IEC 60947-5-2,Part 7.4.1 / IEC 60947-5-2,Part 7.4.2	
POM	POM		POM	PBT

EQM1-8802N-A3U2T	1	EQM1-8802N-A3U2M	ECM1-D1104N-A3U2	1	ECM2-D1108N-A3U2	ECM1-1204N-A3U2	1	ECM2-1208N-A3U2
EQM1-8802N-B3U2T	2	EQM1-8802N-B3U2M	ECM1-D1104N-B3U2	2	ECM2-D1108N-B3U2	ECM1-1204N-B3U2	2	ECM2-1208N-B3U2
EQM1-8802P-A3U2T	3	EQM1-8802P-A3U2M	ECM1-D1104P-A3U2	3	ECM2-D1108P-A3U2	ECM1-1204P-A3U2	3	ECM2-1208P-A3U2
EQM1-8802P-B3U2T	4	EQM1-8802P-B3U2M	ECM1-D1104P-B3U2	4	ECM2-D1108P-B3U2	ECM1-1204P-B3U2	4	ECM2-1208P-B3U2
			ECM1-D1104P-S4U2	6	ECM2-D1108P-S4U2	ECM1-1204P-S4U2	6	ECM2-1208P-S4U2
			ECM1-D1104N-S4U2	5	ECM2-D1108N-S4U2	ECM1-1204N-S4U2	5	ECM2-1208N-S4U2
			ECM1-D1104C-A2U2	7	ECM2-D1108C-A2U2	ECM1-1204C-A2U2	7	ECM2-1208C-A2U2
			ECM1-D1104C-B2U2	8	ECM2-D1108C-B2U2	ECM1-1204C-B2U2	8	ECM2-1208C-B2U2

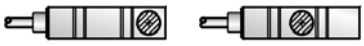

top sensing style　　center sensing style

Please see Page 18 for details and specifications of DC 2-Wire models on this page.

Q8	ϕ11	M12	
3.0ϕ3X0.15	4ϕ3x0.3 4	4ϕ3x0.34	
Approx.38 g	Approx.55 g	Approx.67 g	Approx.67 g

DC STANDARD BODY WITH EXTENDED SENSING DISTANCE PROXIMITY SWITCH

Q12	M18		M30	
●	●	○	●	○
4 mm	8 mm	16 mm	16 mm	25mm
die-cast	nickel plated brass		nickel plated brass	
●	●		●	
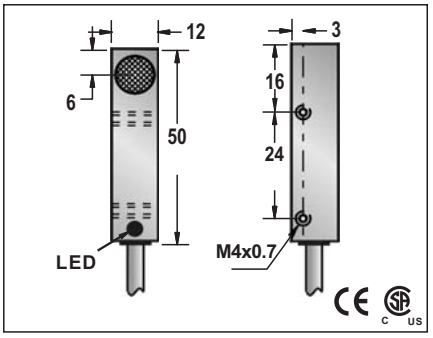	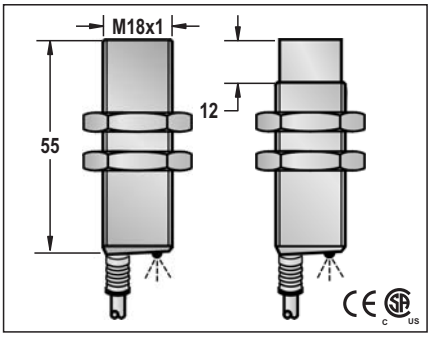		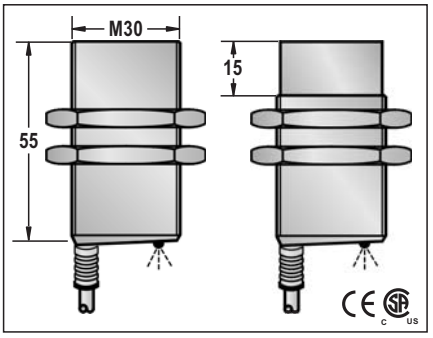	
10-30VDC	10-30VDC		10-30VDC	
<10%	<10%		<10%	
<10mA	<10mA		<10mA	
200mA	200mA		200mA	
<0.01mA	<0.01mA		<0.01mA	
-	-		-	
-	-		-	
<1.5V	<1.5V		<1.5V	
1KHZ	500HZ	150HZ	150HZ	100HZ
0.2ms/0.2ms	0.5ms/0.5ms	1ms/1ms	1ms/1ms	1ms/1ms
<15%(Sr)	<15%		<15%	
<1.0%(Sr)	<1.0%(Sr)		<1.0%(Sr)	
IP67	IP67		IP67	
-25°C - +70°C	-25°C - +70°C		-25°C - +70°C	
<10%(Sr)	<10%(Sr)		<10%(Sr)	
YES	YES		YES	
220mA	220mA		220mA	
<10ms	<10ms		<10ms	
RFI>3V/m / EFT>1KV / ESD>4KV (contact)	RFI>3V/m / EFT>1KV / ESD>4KV (contact)		RFI>3V/m / EFT>1KV / ESD>4KV (contact)	
IEC 60947-5-2,Part 7.4.1 / IEC 60947-5-2,Part 7.4.2	IEC 60947-5-2,Part 7.4.1 / IEC 60947-5-2,Part 7.4.2		IEC 60947-5-2,Part 7.4.1 / IEC 60947-5-2,Part 7.4.2	
POM	PBT		PBT	
EQM1-1204N-A3U2T	1	ECM1-1808N-A3U2	1	ECM2-1816N-A3U2	ECM1-3016N-A3U2	1	ECM2-3025N-A3U2
EQM1-1204N-B3U2T	2	ECM1-1808N-B3U2	2	ECM2-1816N-B3U2	ECM1-3016N-B3U2	2	ECM2-3025N-B3U2
EQM1-1204P-A3U2T	3	ECM1-1808P-A3U2	3	ECM2-1816P-A3U2	ECM1-3016P-A3U2	3	ECM2-3025P-A3U2
EQM1-1204P-B3U2T	4	ECM1-1808P-B3U2	4	ECM2-1816P-B3U2	ECM1-3016P-B3U2	4	ECM2-3025P-B3U2
		ECM1-1808P-S4U2	6	ECM2-1816P-S4U2	ECM1-3016P-S4U2	6	ECM2-3025P-S4U2
		ECM1-1808N-S4U2	5	ECM2-1816N-S4U2	ECM1-3016N-S4U2	5	ECM2-3025N-S4U2
		ECM1-1808C-A2U2	7	ECM2-1816C-A2U2	ECM1-3016C-A2U2	7	ECM2-3025C-A2U2
		ECM1-1808C-B2U2	8	ECM2-1816C-B2U2	ECM1-3016C-B2U2	8	ECM2-3025C-B2U2
	Please see Page 18 for details and specifications of DC 2-Wire models on this page.			
4ϕ3X0.34	5.0ϕ44x0.1		5.0ϕ44x0.1	
Approx.75 g	Approx.153 g	Approx.144 g	Approx.217 g	Approx.207 g

Note:
Coming Soon : Part numbers with underline