DC CAPACITIVE PROXIMITY SWITCH CONNECTOR TYPE

ϕ6.5		ϕ 6.5		ϕ8	
●	○	●	○	●	○
1 mm	3 mm	1 mm	3 mm	1 mm	3 mm
stainless steel		stainless steel or nickel plated brass		stainless steel	
●		●		●	

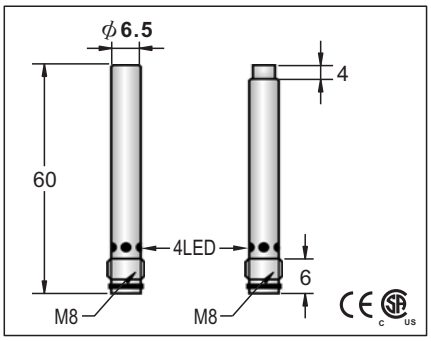

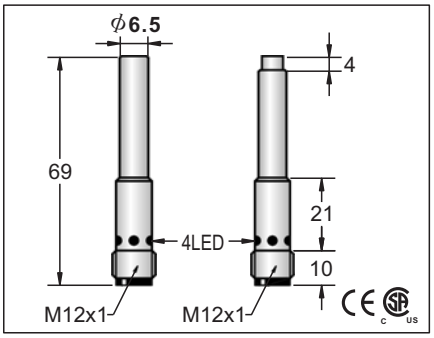

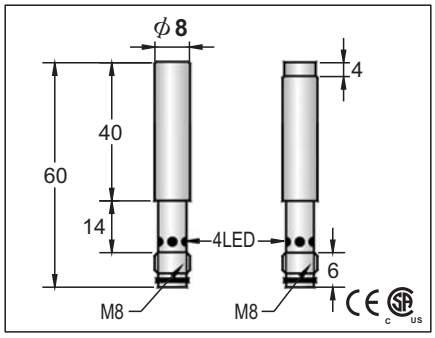

10-30VDC		
<10%		
<10mA		
200mA		
<0.01mA		
-		
-		
<2 VDC		
100HZ		
1.5ms/1.5ms		
<15%(Sr)		
<5%(Sr)		
IP67		
-25°C—+70°C		
<10%(Sr)		
YES		
220mA		
<25ms		
RFI>3V/m / EFT>1KV / ESD>4KV (contact)		
IEC 60947-5-2,Part 7.4.1 / IEC 60947-5-2,Part 7.4.2		
POM		
CCU1-D0601N-ACU3	29	CCU2-D0603N-ACU3
CCU1-D0601N-BCU3	29	CCU2-D0603N-BCU3
CCU1-D0601P-ACU3	30	CCU2-D0603P-ACU3
CCU1-D0601P-BCU3	30	CCU2-D0603P-BCU3
approx.17g		approx.16g

10-30VDC		
<10%		
<10mA		
200mA		
<0.01mA		
-		
-		
<2 VDC		
100HZ		
1.5ms/1.5ms		
<15%(Sr)		
<5%(Sr)		
IP67		
-25°C—+70°C		
<10%(Sr)		
YES		
220mA		
<25ms		
RFI>3V/m / EFT>1KV / ESD>4KV (contact)		
IEC 60947-5-2,Part 7.4.1 / IEC 60947-5-2,Part 7.4.2		
POM		
CCM1-D0601N-ARU4	33	CCM2-D0603N-ARU4
CCM1-D0601N-BRU4	34	CCM2-D0603N-BRU4
CCM1-D0601P-ARU4	35	CCM2-D0603P-ARU4
CCM1-D0601P-BRU4	36	CCM2-D0603P-BRU4
approx.25g		

10-30VDC		
<10%		
<10mA		
200mA		
<0.01mA		
-		
-		
<2 VDC		
100HZ		
1.5ms/1.5ms		
<15%(Sr)		
<5%(Sr)		
IP67		
-25°C—+70°C		
<10%(Sr)		
YES		
220mA		
<25ms		
RFI>3V/m / EFT>1KV / ESD>4KV (contact)		
IEC 60947-5-2,Part 7.4.1 / IEC 60947-5-2,Part 7.4.2		
POM		
CCU1-D0801N-ACU3	29	CCU2-D0803N-ACU3
CCU1-D0801N-BCU3	29	CCU2-D0803N-BCU3
CCU1-D0801P-ACU3	30	CCU2-D0803P-ACU3
CCU1-D0801P-BCU3	30	CCU2-D0803P-BCU3
approx.15g		

DC CAPACITIVE PROXIMITY SWITCH CONNECTOR TYPE

ϕ8		M8		M8	
●	○	●	○	●	○
1 mm	3 mm	1 mm	3 mm		3 mm
stainless steel or nickel plated brass		stainless steel		stainless steel or nickel plated brass	
●		●		●	

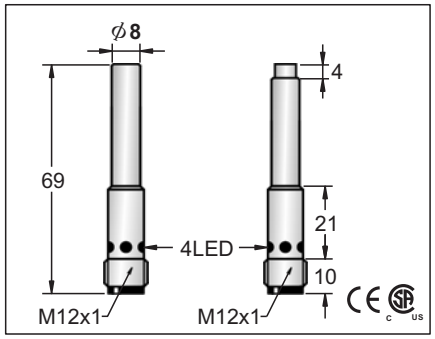

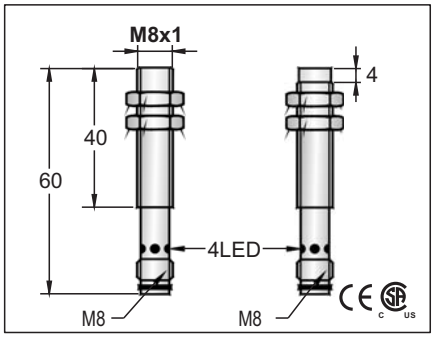

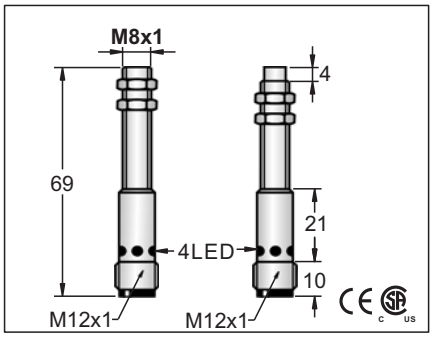

10-30VDC			10-30VDC			10-30VDC		
<10%			<10%			<10%		
<10mA			<10mA			<10mA		
200mA			200mA			200mA		
<0.01mA			<0.01mA			<0.01mA		
-			-			-		
-			-			-		
<2 VDC			<2 VDC			<2 VDC		
100HZ			100HZ			100HZ		
1.5ms/1.5ms			1.5ms/1.5ms			1.5ms/1.5ms		
<15%(Sr)			<15%(Sr)			<15%(Sr)		
<5%(Sr)			<5%(Sr)			<5%(Sr)		
IP67			IP67			IP67		
-25°C—+70°C			-25°C—+70°C			-25°C—+70°C		
<10%(Sr)			<10%(Sr)			<10%(Sr)		
YES			YES			YES		
220mA			220mA			220mA		
<25ms			<25ms			<25ms		
RFI>3V/m / EFT>1KV / ESD>4KV (contact)			RFI>3V/m / EFT>1KV / ESD>4KV (contact)			RFI>3V/m / EFT>1KV / ESD>4KV (contact)		
IEC 60947-5-2,Part 7.4.1 / IEC 60947-5-2,Part 7.4.2			IEC 60947-5-2,Part 7.4.1 / IEC 60947-5-2,Part 7.4.2			IEC 60947-5-2,Part 7.4.1 / IEC 60947-5-2,Part 7.4.2		
POM			POM			POM		
CCM1-D0801N-ARU4	33	CCM2-D0803N-ARU4	CCU1-0801N-ACU3	29	CCU2-0803N-ACU3	CCM1-0801N-ARU4	33	CCM2-0803N-ARU4
CCM1-D0801N-BRU4	34	CCM2-D0803N-BRU4	CCU1-0801N-BCU3	29	CCU2-0803N-BCU3	CCM1-0801N-BRU4	34	CCM2-0803N-BRU4
CCM1-D0801P-ARU4	35	CCM2-D0803P-ARU4	CCU1-0801P-ACU3	30	CCU2-0803P-ACU3	CCM1-0801P-ARU4	35	CCM2-0803P-ARU4
CCM1-D0801P-BRU4	36	CCM2-D0803P-BRU4	CCU1-0801P-BCU3	30	CCU2-0803P-BCU3	CCM1-0801P-BRU4	36	CCM2-0803P-BRU4
approx.28g			approx.15g			approx.22g		approx.21g

Note:
Coming Soon : Part numbers with underline
In Preparation: Part numbers with a line through the middle

DC CAPACITIVE PROXIMITY SWITCH CONNECTOR TYPE

ϕ11		M12		M18	
●	○	●	○	●	○
1-4 mm adjustable	1-8 mm adjustable	1-4 mm adjustable	1-8 mm adjustable	2-8 mm adjustable	2-15 mm adjustable
stainless steel or nickel plated brass		stainless steel or nickel plated brass		stainless steel or nickel plated brass	
●		●		●	

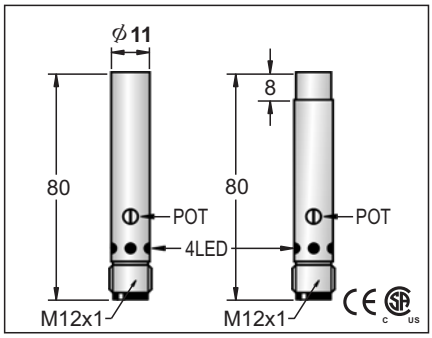

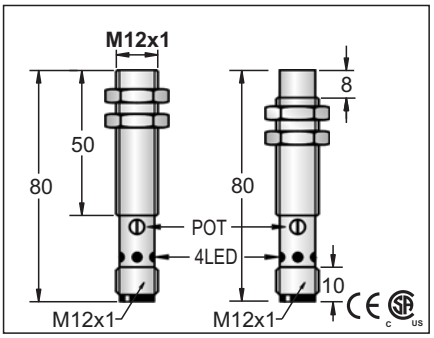

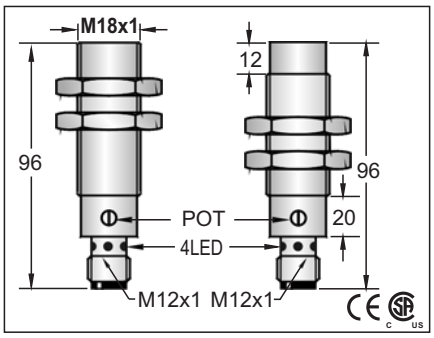

ϕ11	M12	M18
10-30VDC	10-30VDC	10-30VDC
<10%	<10%	<10%
<10m A	<10m A	<10mA
200m A	200m A	300mA
<0.01m A	<0.01m A	<0.01mA
-	-	-
-	-	-
<2 VDC	<2 VDC	<2 VDC
100HZ	100HZ	100HZ
1.5ms/1.5ms	1.5ms/1.5ms	1.5ms/1.5ms
<15%(Sr)	<15%(Sr)	<15%(Sr)
<5%(Sr)	<5%(Sr)	<5%(Sr)
IP67	IP67	IP67
-25°C—+70°C	-25°C—+70°C	-25°C—+70°C
<10%(Sr)	<10%(Sr)	<10%(Sr)
YES	YES	YES
220mA	220mA	350mA
<25ms	<25ms	<25ms
RFI>3V/m / EFT>1KV / ESD>4KV (contact)	RFI>3V/m / EFT>1KV / ESD>4KV (contact)	RFI>3V/m / EFT>1KV / ESD>4KV (contact)
IEC 60947-5-2,Part 7.4.1 / IEC 60947-5-2,Part 7.4.2	IEC 60947-5-2,Part 7.4.1 / IEC 60947-5-2,Part 7.4.2	IEC 60947-5-2,Part 7.4.1 / IEC 60947-5-2,Part 7.4.2
PBT	PBT	PBT

CCM1-D1104N-ARU4	33	CCM2-D1108N-ARU4	CCM1-1204N-ARU4	33	CCM2-1208N-ARU4	CCM1-1808N-ARU4	33	CCM2-1815N-ARU4
CCM1-D1104N-BRU4	34	CCM2-D1108N-BRU4	CCM1-1204N-BRU4	34	CCM2-1208N-BRU4	CCM1-1808N-BRU4	34	CCM2-1815N-BRU4
CCM1-D1104P-ARU4	35	CCM2-D1108P-ARU4	CCM1-1204P-ARU4	35	CCM2-1208P-ARU4	CCM1-1808P-ARU4	35	CCM2-1815P-ARU4
CCM1-D1104P-BRU4	36	CCM2-D1108P-BRU4	CCM1-1204P-BRU4	36	CCM2-1208P-BRU4	CCM1-1808P-BRU4	36	CCM2-1815P-BRU4
CCM1-D1104P-SRU4	38	CCM2-D1108P-SRU4	CCM1-1204P-SRU4	38	CCM2-1208P-SRU4	*CCM1-1808P-SRU4	38	*CCM2-1815P-SRU4
CCM1-D1104N-SRU4	37	CCM2-D1108N-SRU4	CCM1-1204N-SRU4	37	CCM2-1208N-SRU4	*CCM1-1808N-SRU4	37	*CCM2-1815N-SRU4

* Total length is 91.5mm for changover tyde

approx.30g	approx.29g
approx.31g	approx.30g
approx.69g	

Note:
Coming Soon : Part numbers with underline
In Preparation: Part numbers with a line through the middle

DC CAPACITIVE PROXIMITY SWITCH CONNECTOR TYPE

M30		M30	
●	○	●	○
2-20mm adjustable	2-30 mm adjustable	2-20mm adjustable	2-30 mm adjustable
stainless steel or nickel plated brass		Nickel plated brass	
●		●	

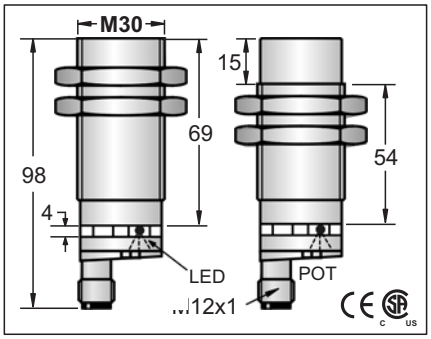

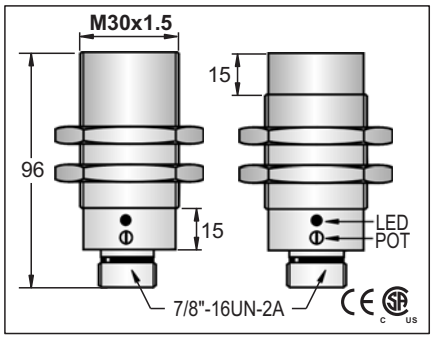

10-30VDC			10-30VDC		
<10%			<10%		
<10m A			<10mA		
300m A			300m A		
<0.01mA			<0.01mA		
-			-		
-			-		
<2 VDC			<2 VDC		
100HZ			100HZ		
1.5ms/1.5ms			1.5ms/1.5ms		
<15%(Sr)			<15%(Sr)		
<5%(Sr)			<5%(Sr)		
IP67			IP67		
-25°C—+70°C			-25°C—+70°C		
<10%(Sr)			<10%(Sr)		
YES			YES		
350mA			350mA		
<25m s			<25m s		
RFI>3V/m / EFT>1KV / ESD>4KV (contact)			RFI>3V/m / EFT>1KV / ESD>4KV (contact)		
IEC 60947-5-2,Part 7.4.1 / IEC 60947-5-2,Part 7.4.2			IEC 60947-5-2,Part 7.4.1 / IEC 60947-5-2,Part 7.4.2		
PBT			PBT		
CCM1-3020N-ARU4	33	CCM2-3030N-ARU4	CCM1-3020N-AZU4	41	CCM2-3030N-AZU4
CCM1-3020N-BRU4	34	CCM2-3030N-BRU4	CCM1-3020N-BZU4	42	CCM2-3030N-BZU4
CCM1-3020P-ARU4	35	CCM2-3030P-ARU4	CCM1-3020P-AZU4	43	CCM2-3030P-AZU4
CCM1-3020P-BRU4	36	CCM2-3030P-BRU4	CCM1-3020P-BZU4	44	CCM2-3030P-BZU4
CCM1-3020P-SRU4	38	CCM2-3030P-SRU4	CCM1-3020P-SZU4	46	CCM2-3030P-SZU4
CCM1-3020N-SRU4	37	CCM2-3030N-SRU4	CCM1-3020N-SZU4	45	CCM2-3030N-SZU4
approx.147g		approx.137g	approx.187g		approx.179g