DC RING TYPE INDUCTIVE PROXIMITY SENSORS WITH CONNECTOR

10mm	10mm	15mm
○	○	○
-	-	-
PBT	PBT	PBT
●	●	●
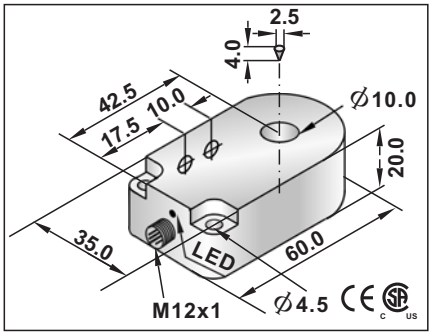	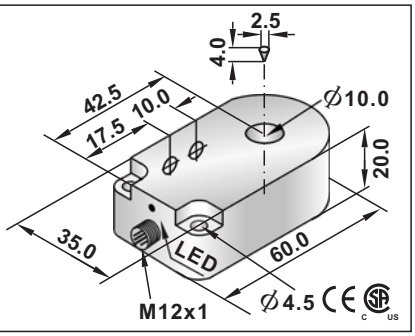	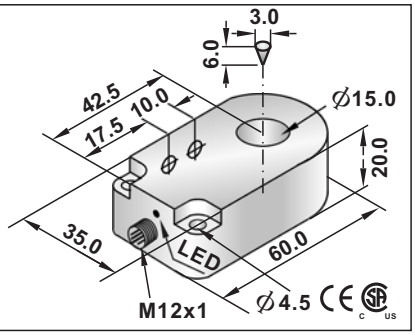
10~60VDC (Ripple≤10%)	10~30VDC (Ripple≤10%)	10~60VDC (Ripple≤10%)
-	-	-
≤1.8mA	≤15mA	≤1.8mA
100mA	≤200mA	100mA
≤1.8mA	≤10uA	≤1.8mA
-	-	-
3mA	-	3mA
<6V at 100mA	≤1.5V at 200mA	<6V at 100mA
2kHZ	2kHZ	1.5kHZ
-	-	-
15%	15%	15%
≤2% of Rated Operating Distance	≤2% of Rated Operating Distance	≤2% of Rated Operating Distance
IP67	IP67	IP67
-25°C to 70°C	-25°C to 70°C	-25°C to 70°C
±10%(sr)	±10%(sr)	±10%(sr)
D=2.5mm;L=4mm	D=2.5mm;L=4mm	D=3mm;L=6mm
Yes	Yes	Yes
Yes	Yes	Yes
120~150mA	220~280mA	120~150mA
RFI>3V/m / EFT>1KV / ESD>4KV (contact)	RFI>3V/m / EFT>1KV / ESD>4KV (contact)	RFI>3V/m / EFT>1KV / ESD>4KV (contact)
IEC 60947-5-2,Part 7.4.1 / IEC 60947-5-2,Part 7.4.2	IEC 60947-5-2,Part 7.4.1 / IEC 60947-5-2,Part 7.4.2	IEC 60947-5-2,Part 7.4.1 / IEC 60947-5-2,Part 7.4.2
	RRP2-R1020N-ARU4 33	
	RRP2-R1020N-BRU4 34	
	RRP2-R1020P-ARU4 35	
	RRP2-R1020P-BRU4 36	
	RRP2-R1020P-SRU4 38	
	RRP2-R1020N-SRU4 37	
~~RRP2-R1020C-ARU4~~ 40		~~RRP2-R1520C-ARU4~~ 40
~~RRP2-R1020C-BRU4~~ 78		~~RRP2-R1520C-BRU4~~ 78
Please see Page 18 for details and specifications of DC 2-Wire models on this page.		
approx.50g	approx.50g	approx.48g

Note:
Coming Soon : Part numbers with underline
In Preparation: Part numbers with a line through the middle

DC RING TYPE INDUCTIVE PROXIMITY SENSORS WITH CONNECTOR

15mm	21mm	21mm
○	○	○
-	-	-
PBT	PBT	PBT
●	●	●
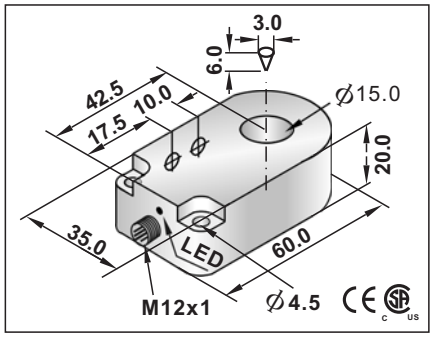	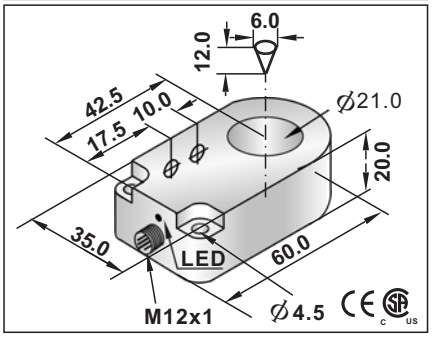	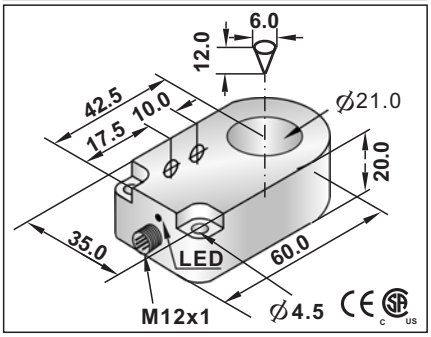
10~30VDC (Ripple≤10%)	10~60VDC (Ripple≤10%)	10~30VDC (Ripple≤10%)
-	-	-
≤15mA	≤1.8mA	≤15mA
≤200mA	100mA	≤200mA
≤10uA	≤1.2mA	≤10uA
-	-	-
-	3mA	-
≤1.5V at 200mA	<6V at 100mA	≤1.5V at 200mA
1.5kHZ	1kHZ	1kHZ
-	-	-
15%	15%	15%
≤2% of Rated Operating Distance	≤2% of Rated Operating Distance	≤2% of Rated Operating Distance
IP67	IP67	IP67
-25°C to 70°C	-25°C to 70°C	-25°C to 70°C
±10%(sr)	±10%(sr)	±10%(sr)
D=3mm;L=6mm	D=6mm;L=12mm	D=6mm;L=12mm
Yes	Yes	Yes
Yes	Yes	Yes
220~280mA	120~150mA	220~280mA
RFI>3V/m / EFT>1KV / ESD>4KV (contact)	RFI>3V/m / EFT>1KV / ESD>4KV (contact)	RFI>3V/m / EFT>1KV / ESD>4KV (contact)
IEC 60947-5-2,Part 7.4.1 / IEC 60947-5-2,Part 7.4.2	IEC 60947-5-2,Part 7.4.1 / IEC 60947-5-2,Part 7.4.2	IEC 60947-5-2,Part 7.4.1 / IEC 60947-5-2,Part 7.4.2
RRP2-R1520N-ARU4 33		RRP2-R2120N-ARU4 33
RRP2-R1520N-BRU4 34		RRP2-R2120N-BRU4 34
RRP2-R1520P-ARU4 35		RRP2-R2120P-ARU4 35
RRP2-R1520P-BRU4 36		RRP2-R2120P-BRU4 36
RRP2-R1520P-SRU4 38		RRP2-R2120P-SRU4 38
RRP2-R1520N-SRU4 37		RRP2-R2120N-SRU4 37
	RRP2-R2120C-ARU4 40	
	RRP2-R2120C-BRU4 78	
	Please see Page 18 for details and specifications of DC 2-Wire models on this page.	
approx.48g	approx.50g	approx.50g

Note:
Coming Soon : Part numbers with underline

DC RING TYPE INDUCTIVE PROXIMITY SENSORS WITH CONNECTOR

43mm	43mm	
○	○	
-	-	
PBT	PBT	
●	●	
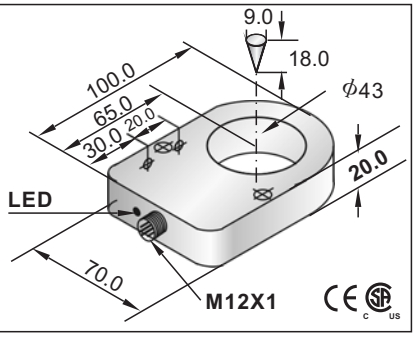	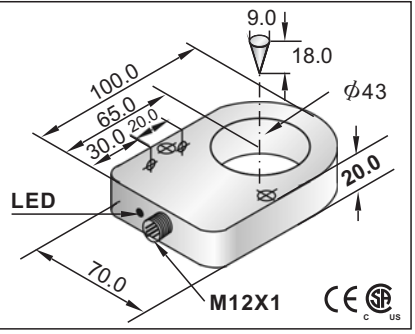	
10~60VDC (Ripple≤10%)	10~30VDC (Ripple≤10%)	
-	-	
≤1.8mA	≤15mA	
100mA	≤200mA	
≤1.2mA	≤10uA	
-	-	
3mA	-	
<6V at 100mA	≤1.5V at 200mA	
500HZ	500HZ	
-	-	
15%	15%	
≤2% of Rated Operating Distance	≤2% of Rated Operating Distance	
IP67	IP67	
-25℃ to 70℃	-25℃ to 70℃	
±10%(sr)	±10%(sr)	
D=9mm;L=18mm	D=9mm;L=18mm	
Yes	Yes	
Yes	Yes	
120~150mA	220~280mA	
RFI>3V/m / EFT>1KV / ESD>4KV (contact)	RFI>3V/m / EFT>1KV / ESD>4KV (contact)	
IEC 60947-5-2,Part 7.4.1 / IEC 60947-5-2,Part 7.4.2	IEC 60947-5-2,Part 7.4.1 / IEC 60947-5-2,Part 7.4.2	

		RRP2-R4320N-ARU4	33		
		RRP2-R4320N-BRU4	34		
		RRP2-R4320P-ARU4	35		
		RRP2-R4320P-BRU4	36		
		RRP2-R4320P-SRU4	38		
		RRP2-R4320N-SRU4	37		
RRP2-R4320C-ARU4	40				
RRP2-R4320C-BRU4	78				

Please see Page 18 for details and specifications of DC 2-Wire models on this page.		
approx.134g	approx.134g	approx.59g

Note:
Coming Soon : Part numbers with underline