# AC CAPACITIVE PLASTIC HOUSING CONNECTOR TYPE

| M18 | | M30 | | ϕ20 | |
|---|---|---|---|---|---|
| ● | ○ | ● | ○ | ● | ○ |
| 2-8 mm adjustable | 2-15 mm adjustable | 2-20 mm adjustable | 2-30 mm adjustable | 2-12 mm adjustable | 2-20 mm adjustable |
| PBT RESIN | | PBT RESIN | | PBT RESIN | |
| ● | | ● | | ● | |

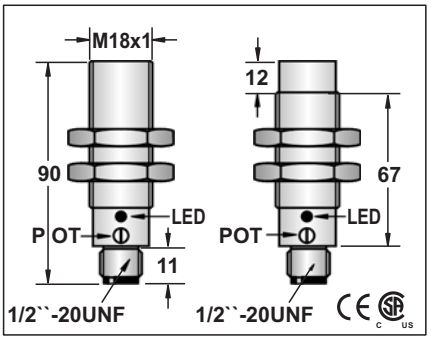


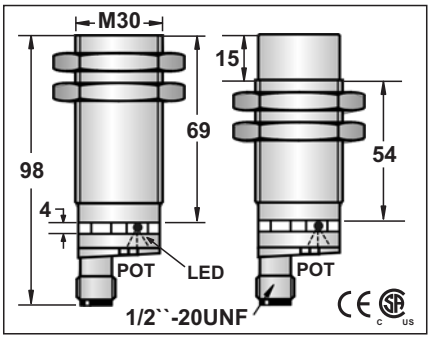


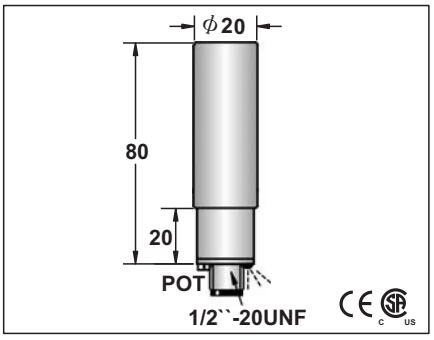


| M18 | M30 | ϕ20 |
|---|---|---|
| 20-250VAC | 20-250VAC | 20-250VAC |
| - | - | - |
| <2.5mA | <2.5mA | <2.5mA |
| 300mA | 300mA | 300mA |
| <2.5mA | <2.5mA | <2.5mA |
| 5A | 5A | 5A |
| 5mA | 5mA | 5mA |
| <9VAC AT 300MA | <9VAC AT 300MA | <9VAC AT 300MA |
| 25HZ | 25HZ | 25HZ |
| 10ms/10ms | 10ms/10ms | 10ms/10ms |
| <15%(Sr) | <15%(Sr) | <15%(Sr) |
| <5%(Sr) | <5%(Sr) | <5%(Sr) |
| IP67 | IP67 | IP67 |
| -25°C~+70°C | -25°C~+70°C | -25°C~+70°C |
| <10%(Sr) | <10%(Sr) | <10%(Sr) |
| - | - | - |
| - | - | - |
| - | - | - |
| RFI>3V/m / EFT>1KV / ESD>4KV (contact) | RFI>3V/m / EFT>1KV / ESD>4KV (contact) | RFI>3V/m / EFT>1KV / ESD>4KV (contact) |
| IEC 60947-5-2,Part 7.4.1 / IEC 60947-5-2,Part 7.4.2 | IEC 60947-5-2,Part 7.4.1 / IEC 60947-5-2,Part 7.4.2 | IEC 60947-5-2,Part 7.4.1 / IEC 60947-5-2,Part 7.4.2 |
| PBT | PBT | PBT |

| M18 | | | M30 | | | ϕ20 | | |
|---|---|---|---|---|---|---|---|---|
| CCP1-1808A-AUL3 | 58 | CCP2-1815A-AUL3 | CCP1-3020A-AUL3 | 58 | CCP2-3030A-AUL3 | CCP1-D2012A-AUL3 | 58 | CCP2-D2020A-AUL3 |
| CCP1-1808A-BUL3 | 58 | CCP2-1815A-BUL3 | CCP1-3020A-BUL3 | 58 | CCP2-3030A-BUL3 | CCP1-D2012A-BUL3 | 58 | CCP2-D2020A-BUL3 |

| M18 | | M30 | ϕ20 |
|---|---|---|---|
| approx.79g | approx.80g | approx.120g | approx.57g |

# AC CAPACITIVE PLASTIC HOUSING CONNECTOR TYPE

| M30 | | ϕ34 | | ϕ34 | |
|---|---|---|---|---|---|
| ● | ○ | ● | ○ | ● | ○ |
| 2-20 mm adjustable | 2-30 mm adjustable | 2-25 mm adjustable | 2-35 mm adjustable | 2-25 mm adjustable | 2-35 mm adjustable |
| PBT RESIN | | PBT RESIN | | PBT RESIN | |
| ● | | ● | | ● | |

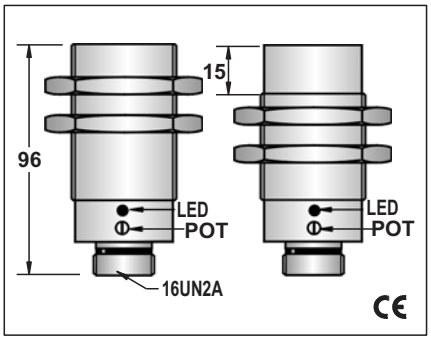


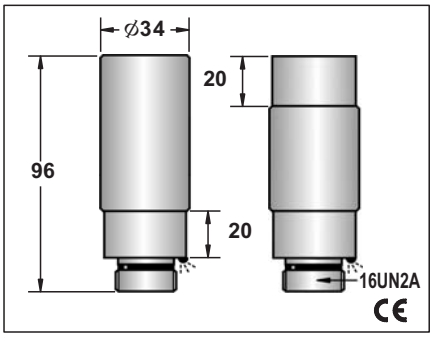


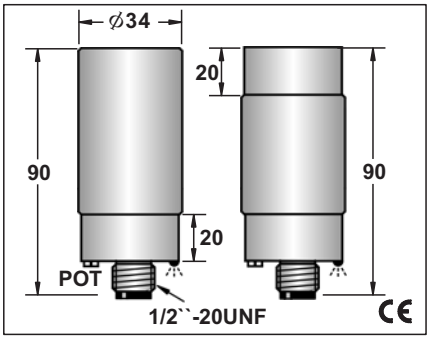


| | | |
|---|---|---|
| 20-250VAC | 20-250VAC | 20-250VAC |
| - | - | - |
| <2.5mA | <2.5mA | <2.5mA |
| 300mA | 300mA | 300mA |
| <2.5mA | <2.5mA | <2.5mA |
| 5A | 5A | 5A |
| 5mA | 5mA | 5mA |
| <9VAC AT 300MA | <9VAC AT 300MA | <9VAC AT 300MA |
| 25HZ | 25HZ | 25HZ |
| 10ms/10ms | 10ms/10ms | 10ms/10ms |
| <15%(Sr) | <15%(Sr) | <15%(Sr) |
| <5%(Sr) | <5%(Sr) | <5%(Sr) |
| IP67 | IP67 | IP67 |
| -25°C~+70°C | -25°C~+70°C | -25°C~+70°C |
| <10%(Sr) | <10%(Sr) | <10%(Sr) |
| - | - | - |
| - | - | - |
| - | - | - |
| RFI>3V/m / EFT>1KV / ESD>4KV (contact) | RFI>3V/m / EFT>1KV / ESD>4KV (contact) | RFI>3V/m / EFT>1KV / ESD>4KV (contact) |
| IEC 60947-5-2,Part 7.4.1 / IEC 60947-5-2,Part 7.4.2 | IEC 60947-5-2,Part 7.4.1 / IEC 60947-5-2,Part 7.4.2 | IEC 60947-5-2,Part 7.4.1 / IEC 60947-5-2,Part 7.4.2 |
| - | - | PBT |

| | | | | | | | | |
|---|---|---|---|---|---|---|---|---|
| CCP1-3020A-AZL2 | 66 | CCP2-3030A-AZL2 | CCP1-D3425A-AZL2 | 66 | CCP2-D3435A-AZL2 | CCP1-D3425A-AUL3 | 58 | CCP2-D3435A-AUL3 |
| CCP1-3020A-BZL2 | 66 | CCP2-3030A-BZL2 | CCP1-D3425A-BZL2 | 66 | CCP2-D3435A-BZL2 | CCP1-D3425A-BUL3 | 58 | CCP2-D3435A-BUL3 |

| | | |
|---|---|---|
| approx.120g | approx.162g | approx.162g |