AC INDUCTIVE SHORT FORM PROXIMITY SWITCH

M 18		M 30	
●	○	●	○
5 mm	8 mm	10 mm	15 mm
stainless steel or nickel plated brass		stainless steel or nickel plated brass	
●		●	

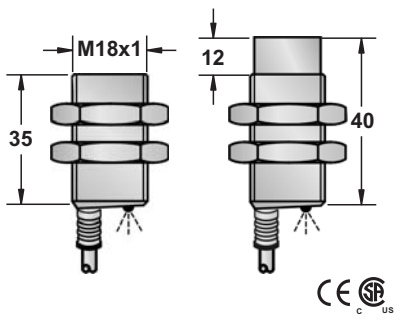

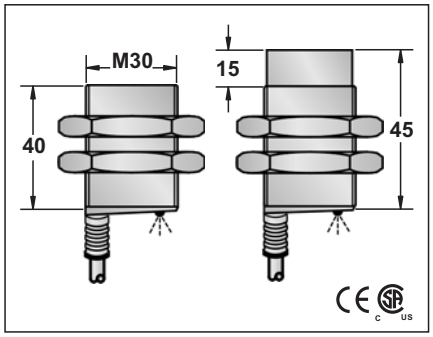

20-250VAC			20-250VAC		
-			-		
<1.8mA			<1.8mA		
400mA			400mA		
<1.8mA			<1.8mA		
5A(20ms)			5A(20ms)		
5mA			5mA		
<8VAC at 400mA			<8VAC at 400MA		
<25HZ			<25HZ		
10ms/10ms			10ms/10ms		
<15%(Sr)			<15%(Sr)		
<1.0%(Sr)			<1.0%(Sr)		
IP67			IP67		
-25°C - +70°C			-25°C - +70°C		
<10%(Sr)			<10%(Sr)		
NO			NO		
-			-		
-			-		
RFI>3V/m / EFT>1KV / ESD>4KV (contact)			RFI>3V/m / EFT>1KV / ESD>4KV (contact)		
IEC 60947-5-2,Part 7.4.1 / IEC 60947-5-2,Part 7.4.2			IEC 60947-5-2,Part 7.4.1 / IEC 60947-5-2,Part 7.4.2		
-			-		
FCM1-1805A-A3S2	11	FCM2-1808A-A3S2	FCM1-3010A-A3S2	11	FCM2-3015A-A3S2
FCM1-1805A-B3S2	12	FCM2-1808A-B3S2	FCM1-3010A-B3S2	12	FCM2-3015A-B3S2
5.0 ϕ 44x0.1			5.8 ϕ 3x0.5		
Approx.156 g		Approx.146 g	Approx.209 g		Approx.208 g

Note:
Coming Soon : Part numbers with underline