DC SHORT BODY WITH EXTENDED SENSING DISTANCE CONNECTOR TYPE

ϕ6.5		M8		M8	
●	○	●	○	●	○
2 mm	4 mm	2 mm	4mm	2 mm	4mm
stainless steel		stainless steel		stainless steel or nickel plated brass	
●		●		●	

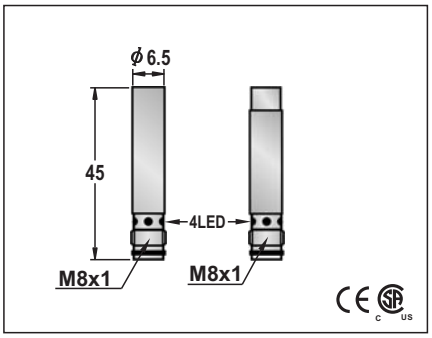

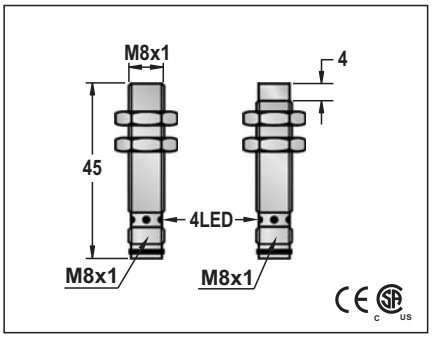

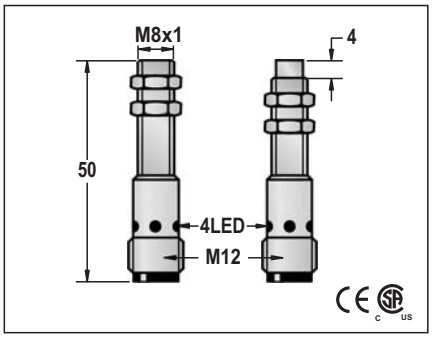

10-30VDC		
<10%		
<10mA		
200mA		
<0.01mA		
-		
-		
<1.5V		
2KHZ	1KHZ	
0.1ms/0.1ms	0.2ms/0.2ms	
<15%		
<1.0%(Sr)		
IP67		
-25°C - +70°C		
<10%(Sr)		
YES		
220mA		
<10ms		
RFI>3V/m / EFT>1KV / ESD>4KV (contact)		
IEC 60947-5-2,Part 7.4.1 / IEC 60947-5-2,Part 7.4.2		
POM		
ECU1-D0602N-ACS3	29	ECU2-D0604N-ACS3
ECU1-D0602N-BCS3	29	ECU2-D0604N-BCS3
ECU1-D0602P-ACS3	30	ECU2-D0604P-ACS3
ECU1-D0602P-BCS2	30	ECU2-D0604P-BCS3
Approx.14 g		

10-30VDC		
<10%		
<10mA		
200mA		
<0.01mA		
-		
-		
<1.5V		
2KHZ	1KHZ	
0.1ms/0.1ms	0.2ms/0.2ms	
<15%		
<1.0%(Sr)		
IP67		
-25°C - +70°C		
<10%(Sr)		
YES		
220mA		
<10ms		
RFI>3V/m / EFT>1KV / ESD>4KV (contact)		
IEC 60947-5-2,Part 7.4.1 / IEC 60947-5-2,Part 7.4.2		
POM		
ECU1-0802N-ACS3	29	ECU2-0804N-ACS3
ECU1-0802N-BCS3	29	ECU2-0804N-BCS3
ECU1-0802P-ACS3	30	ECU2-0804P-ACS3
ECU1-0802P-BCS3	30	ECU2-0804P-BCS3
Approx.14 g		

10-30VDC		
<10%		
<10mA		
200mA		
<0.01mA		
-		
-		
<1.5V		
2KHZ	1KHZ	
0.1ms/0.1ms	0.2ms/0.2ms	
<15%		
<1.0%(Sr)		
IP67		
-25°C - +70°C		
<10%(Sr)		
YES		
220mA		
<10ms		
RFI>3V/m / EFT>1KV / ESD>4KV (contact)		
IEC 60947-5-2,Part 7.4.1 / IEC 60947-5-2,Part 7.4.2		
POM		
ECU1-0802N-ARS4	29	ECU2-0804N-ARS4
ECU1-0802N-BRS4	29	ECU2-0804N-BRS4
ECU1-0802P-ARS4	30	ECU2-0804P-ARS4
ECU1-0802P-BRS4	30	ECU2-0804P-BRS4
Approx.17 g		

DC SHORT BODY WITH EXTENDED SENSING DISTANCE CONNECTOR TYPE

Q8	ϕ11		M12	
●	●	○	●	○
2 mm	4 mm	8 mm	4 mm	8 mm
die-cast	nickel plated brass		nickel plated brass	
●	●		●	

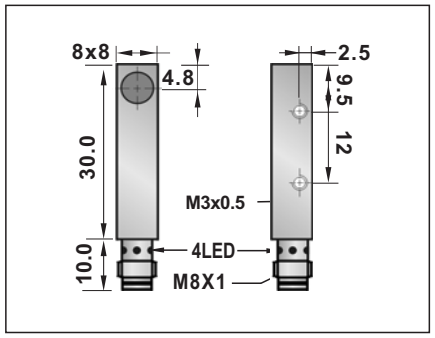

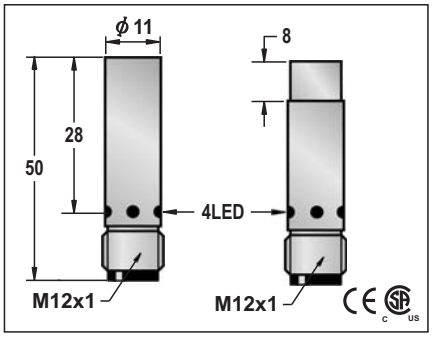

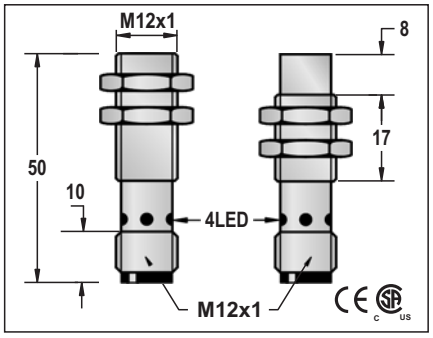

Q8	ϕ11		M12	
10-30VDC	10-30VDC		10-30VDC	
<10%	<10%		<10%	
<10mA	<10mA		<10mA	
200mA	200mA		200mA	
<0.01mA	<0.01mA		<0.01mA	
-	-		-	
-	-		-	
<1.5V	<1.5V		<1.5V	
2KHZ	1KHZ	500HZ	1KHZ	500HZ
0.1ms/0.1ms	0.2ms/0.2ms	0.5ms/0.5ms	0.2ms/0.2ms	0.5ms/0.5ms
<15%(Sr)	<15%		<15%	
<1.0%(Sr)	<1.0%(Sr)		<1.0%(Sr)	
IP67	IP67		IP67	
-25°C - +70°C	-25°C - +70°C		-25°C - +70°C	
<10%(Sr)	<10%(Sr)		<10%(Sr)	
YES	YES		YES	
220mA	220mA		220mA	
<10ms	<10ms		<10ms	
RFI>3V/m / EFT>1KV / ESD>4KV (contact)	RFI>3V/m / EFT>1KV / ESD>4KV (contact)		RFI>3V/m / EFT>1KV / ESD>4KV (contact)	
IEC 60947-5-2,Part 7.4.1 / IEC 60947-5-2,Part 7.4.2	IEC 60947-5-2,Part 7.4.1 / IEC 60947-5-2,Part 7.4.2		IEC 60947-5-2,Part 7.4.1 / IEC 60947-5-2,Part 7.4.2	
POM	POM		POM	PBT
EQM1-8802N-ACS3T 29	ECM1-D1104N-ARS4 33	ECM2-D1108N-ARS4	ECM1-1204N-ARS4 33	ECM2-1208N-ARS4
EQM1-8802N-BCS3T 29	ECM1-D1104N-BRS4 34	ECM2-D1108N-BRS4	ECM1-1204N-BRS4 34	ECM2-1208N-BRS4
EQM1-8802P-ACS3T 30	ECM1-D1104P-ARS4 35	ECM2-D1108P-ARS4	ECM1-1204P-ARS4 35	ECM2-1208P-ARS4
EQM1-8802P-BCS3T 30	ECM1-D1104P-BRS4 36	ECM2-D1108P-BRS4	ECM1-1204P-BRS4 36	ECM2-1208P-BRS4
	ECM1-D1104P-SRS4 38	ECM2-D1108P-SRS4	ECM1-1204P-SRS4 38	ECM2-1208P-SRS4
	ECM1-D1104N-SRS4 37	ECM2-D1108N-SRS4	ECM1-1204N-SRS4 37	ECM2-1208N-SRS4
	ECM1-D1104C-ARS4 40	ECM2-D1108C-ARS4	ECM1-1204C-ARS4 40	ECM2-1208C-ARS4
	ECM1-D1104C-BRS4 78	ECM2-D1108C-BRS4	ECM1-1204C-BRS4 78	ECM2-1208C-BRS4
	Please see Page 18 for details and specifications of DC 2-Wire models on this page.			
Approx.38 g	Approx.24 g		Approx.25 g	

Note:
Coming Soon : Part numbers with underline

DC SHORT BODY WITH EXTENDED SENSING DISTANCE CONNECTOR TYPE

Q12	M18		M30	
●	●	○	●	○
4 mm	8mm	16mm	16mm	25mm
die-cast	nickel plated brass		nickel plated brass	
●	●		●	

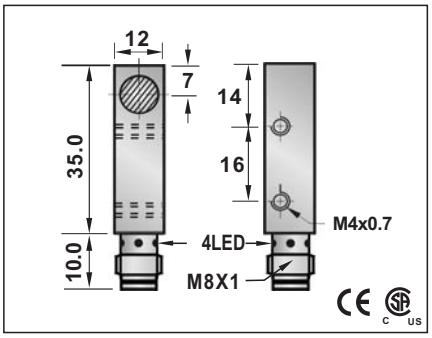

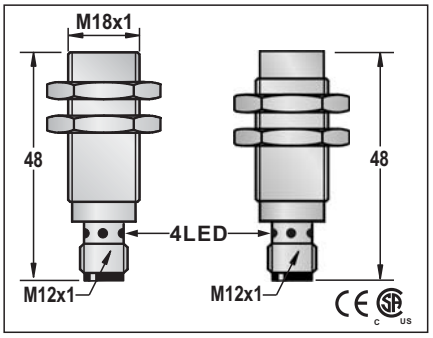

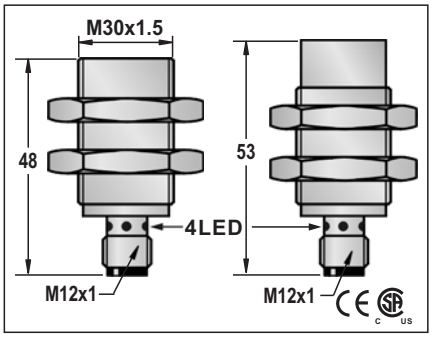

Q12	M18		M30	
10-30VDC	10-30VDC		10-30VDC	
<10%	<10%		<10%	
<10mA	<10mA		<10mA	
200mA	200mA		200mA	
<0.01mA	<0.01mA		<0.01mA	
-	-		-	
-	-		-	
<1.5V	<1.5V		<1.5V	
1KHZ	500HZ	150HZ	500HZ	150HZ
0.2ms/0.2ms	0.5ms/0.5ms	1ms/1ms	0.5ms/0.5ms	1ms/1ms
<15%(Sr)	<15%		<15%	
<1.0%(Sr)	<1.0%(Sr)		<1.0%(Sr)	
IP67	IP67		IP67	
-25°C - +70°C	-25°C - +70°C		-25°C - +70°C	
<10%(Sr)	<10%(Sr)		<10%(Sr)	
YES	YES		YES	
220mA	220mA		220mA	
<10ms	<10ms		<10ms	
RFI>3V/m / EFT>1KV / ESD>4KV (contact)	RFI>3V/m / EFT>1KV / ESD>4KV (contact)		RFI>3V/m / EFT>1KV / ESD>4KV (contact)	
IEC 60947-5-2,Part 7.4.1 / IEC 60947-5-2,Part 7.4.2	IEC 60947-5-2,Part 7.4.1 / IEC 60947-5-2,Part 7.4.2		IEC 60947-5-2,Part 7.4.1 / IEC 60947-5-2,Part 7.4.2	
POM	PBT		PBT	
EQM1-1204N-ACS3T	29	ECM1-1808N-ARS4	33	ECM2-1816N-ARS4	ECM1-3016N-ARS4	33	ECM2-3025N-ARS4
EQM1-1204N-BCS3T	29	ECM1-1808N-BRS4	34	ECM2-1816N-BRS4	ECM1-3016N-BRS4	34	ECM2-3025N-BRS4
EQM1-1204P-ACS3T	30	ECM1-1808P-ARS4	35	ECM2-1816P-ARS4	ECM1-3016P-ARS4	35	ECM2-3025P-ARS4
EQM1-1204P-BCS3T	30	ECM1-1808P-BRS4	36	ECM2-1816P-BRS4	ECM1-3016P-BRS4	36	ECM2-3025P-BRS4
~~EQM1-1204P-SCS4T~~	32	ECM1-1808P-SRS4	38	ECM2-1816P-SRS4	ECM1-3016P-SRS4	38	ECM2-3025P-SRS4
~~EQM1-1204N-SCS4T~~	31	ECM1-1808N-SRS4	37	ECM2-1816N-SRS4	ECM1-3016N-SRS4	37	ECM2-3025N-SRS4
		ECM1-1808C-ARS4	40	ECM2-1816C-ARS4	ECM1-3016C-ARS4	40	ECM2-3025C-ARS4
		ECM1-1808C-BRS4	78	ECM2-1816C-BRS4	ECM1-3016C-BRS4	78	ECM2-3025C-BRS4

Please see Page 18 for details and specifications of DC 2-Wire models on this page.

Q12	M18	M30
Approx.35 g	Approx.50 g	Approx.111 g

Note:
Coming Soon : Part numbers with underline
In Preparation: Part numbers with a line through the middle