# AC CAPACITIVE PROXIMITY SWITCH CONNECTOR TYPE

| M18 | | M30 | |
|---|---|---|---|
| ● | ○ | ● | ○ |
| 2-8 mm adjustable | 2-15 mm adjustable | 2-20 mm adjustable | 2-30 mm adjustable |
| stainless steel or nickel plated brass | | stainless steel or nickel plated brass | |
| ● | | ● | |

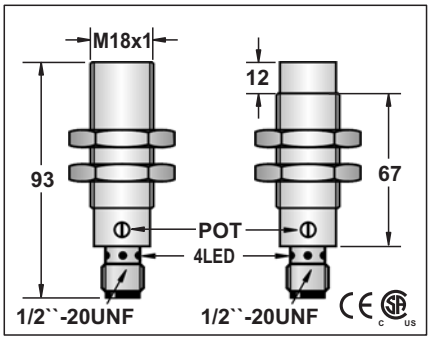


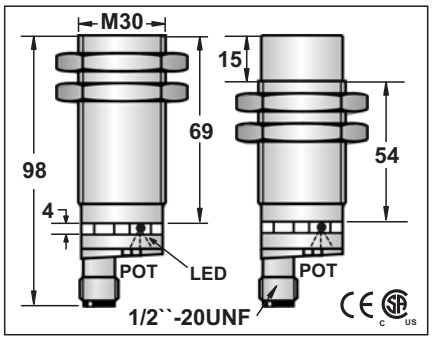


| | |
|---|---|
| 20-250VAC | 20-250VAC |
| - | - |
| <2.5mA | <2.5mA |
| 300mA | 300mA |
| <2.5mA | <2.5mA |
| 5A | 5A |
| 5mA | 5mA |
| <9VAC AT 300MA | <9VAC AT 300MA |
| 25HZ | 25HZ |
| 10ms/10ms | 10ms/10ms |
| <15%(Sr) | <15%(Sr) |
| <5%(Sr) | <5%(Sr) |
| IP67 | IP67 |
| -25°C~+70°C | -25°C~+70°C |
| <10%(Sr) | <10%(Sr) |
| - | - |
| - | - |
| - | - |
| RFI>3V/m / EFT>1KV / ESD>4KV (contact) | RFI>3V/m / EFT>1KV / ESD>4KV (contact) |
| IEC 60947-5-2,Part 7.4.1 / IEC 60947-5-2,Part 7.4.2 | IEC 60947-5-2,Part 7.4.1 / IEC 60947-5-2,Part 7.4.2 |
| PBT | PBT |

| | | | | | |
|---|---|---|---|---|---|
| CCM1-1808A-AUL3 | 56 | CCM2-1815A-AUL3 | CCM1-3020A-AUL3 | 56 | CCM2-3030A-AUL3 |
| CCM1-1808A-BUL3 | 56 | CCM2-1815A-BUL3 | CCM1-3020A-BUL3 | 56 | CCM2-3030A-BUL3 |

| | |
|---|---|
| approx.69g | |
| approx.147g | approx.137g |