DC INDUCTIVE SENSORS WELD FIELD IMMUNE

M 8	
●	○
1mm	2mm
PTFE Coated Brass	
●	

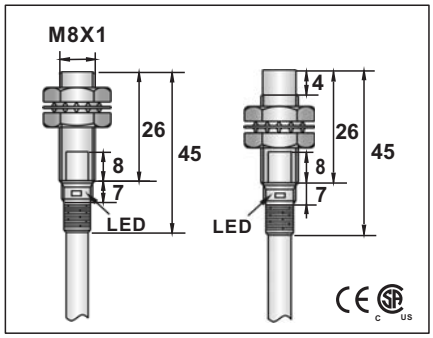

10-30VDC	
<10%	
<10mA	
200mA	
<0.01mA	
-	
-	
<1.5V	
2KHZ	
0.1ms/0.1ms	
<15%(Sr)	
<1.0%(Sr)	
IP67	
-25°C - +70°C	
<10%(Sr)	
YES	
220mA	
<10ms	
RFI>3V/m / EFT>1KV / ESD>4KV (contact)	
IEC 60947-5-2,Part 7.4.1 / IEC 60947-5-2,Part 7.4.2	
ETFE	

WCM1-0801N-A3S2	1	WCM2-0802N-A3S2
WCM1-0801N-B3S2	2	WCM2-0802N-B3S2
WCM1-0801P-A3S2	3	WCM2-0802P-A3S2
WCM1-0801P-B3S2	4	WCM2-0802P-B3S2

3 ϕ 3x0.15
Approx.35 g

M 8	
●	○
1mm	2mm
PTFE Coated Brass	
●	

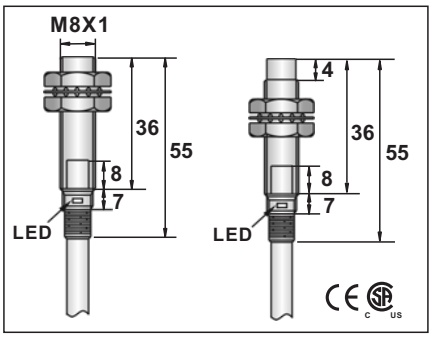

10-30VDC	
<10%	
<10mA	
200mA	
<0.01mA	
-	
-	
<1.5V	
2KHZ	
0.1ms/0.1ms	
<15%(Sr)	
<1.0%(Sr)	
IP67	
-25°C - +70°C	
<10%(Sr)	
YES	
220mA	
<10ms	
RFI>3V/m / EFT>1KV / ESD>4KV (contact)	
IEC 60947-5-2,Part 7.4.1 / IEC 60947-5-2,Part 7.4.2	
ETFE	

WCM1-0801N-A3U2	1	WCM2-0802N-A3U2
WCM1-0801N-B3U2	2	WCM2-0802N-B3U2
WCM1-0801P-A3U2	3	WCM2-0802P-A3U2
WCM1-0801P-B3U2	4	WCM2-0802P-B3U2

3 ϕ 3x0.15
Approx.40 g

M 8	
●	○
1mm	2mm
PTFE Coated Brass	
●	

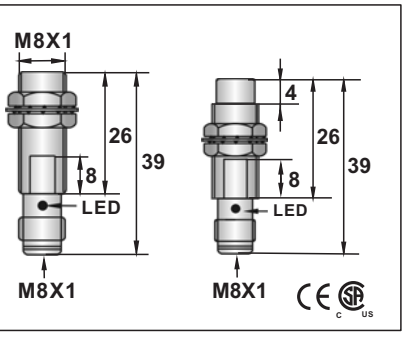

10-30VDC	
<10%	
<10mA	
200mA	
<0.01mA	
-	
-	
<1.5V	
2KHZ	
0.1ms/0.1ms	
<15%(Sr)	
<1.0%(Sr)	
IP67	
-25°C - +70°C	
<10%(Sr)	
YES	
220mA	
<10ms	
RFI>3V/m / EFT>1KV / ESD>4KV (contact)	
IEC 60947-5-2,Part 7.4.1 / IEC 60947-5-2,Part 7.4.2	
ETFE	

WCM1-0801N-ACS3	29	WCM2-0802N-ACS3
WCM1-0801N-BCS3	29	WCM2-0802N-BCS3
WCM1-0801P-ACS3	30	WCM2-0802P-ACS3
WCM1-0801P-BCS3	30	WCM2-0802P-BCS3

Approx.12 g

Note:
Coming Soon : Part numbers with underline

DC INDUCTIVE SENSORS WELD FIELD IMMUNE

M 8		M 12		M 12	
●	○	●	○	●	○
1mm	2mm	2 mm	4 mm	2 mm	4 mm
PTFE Coated Brass		PTFE Coated Brass		PTFE Coated Brass	
●		●		●	

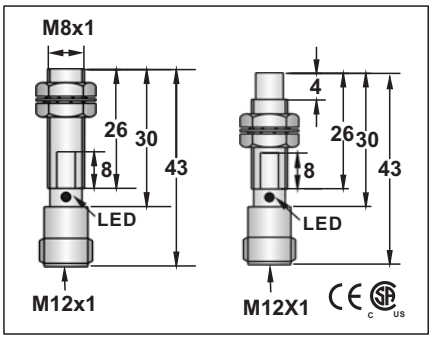

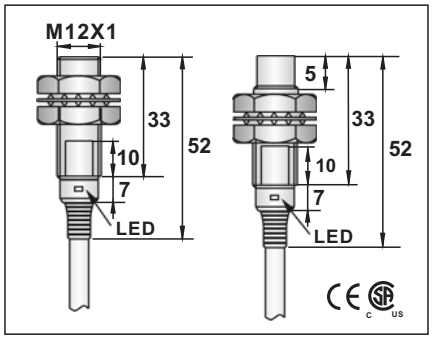

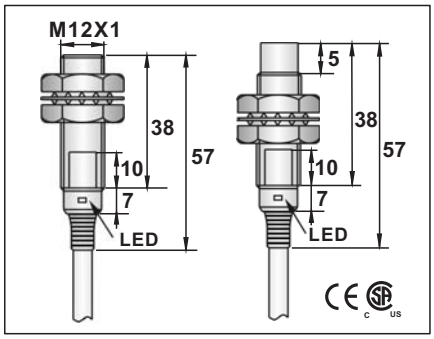

10-30VDC		
<10%		
<10mA		
200mA		
<0.01mA		
-		
-		
<1.5V		
2KHZ		
0.1ms/0.1ms		
<15%(Sr)		
<1.0%(Sr)		
IP67		
-25℃ - +70℃		
<10%(Sr)		
YES		
220mA		
<10ms		
RFI>3V/m / EFT>1KV / ESD>4KV (contact)		
IEC 60947-5-2,Part 7.4.1 / IEC 60947-5-2,Part 7.4.2		
ETFE		
WCM1-0801N-ARU4	33	WCM2-0802N-ARU4
WCM1-0801N-BRU4	34	WCM2-0802N-BRU4
WCM1-0801P-ARU4	35	WCM2-0802P-ARU4
WCM1-0801P-BRU4	36	WCM2-0802P-BRU4

DC INDUCTIVE SENSORS WELD FIELD IMMUNE

M 12	
●	○
2 mm	4 mm
PTFE Coated Brass	
●	

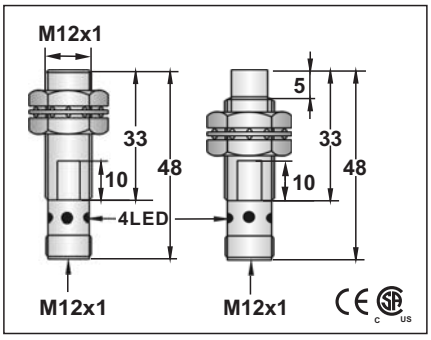

10-30VDC	
<10%	
<10mA	
200mA	
<0.01mA	
-	
-	
<1.5V	
2KHZ	1KHZ
0.1ms/0.1ms	0.2ms/0.2ms
<15%(Sr)	
<1.0%(Sr)	
IP67	
-25 °C - +70 °C	
<10%(Sr)	
YES	
220mA	
<10ms	
RFI>3V/m / EFT>1KV / ESD>4KV (contact)	
IEC 60947-5-2,Part 7.4.1 / IEC 60947-5-2,Part 7.4.2	
ETFE	

WCM1-1202N-ARS4	33	WCM2-1204N-ARS4
WCM1-1202N-BRS4	34	WCM2-1204N-BRS4
WCM1-1202P-ARS4	35	WCM2-1204P-ARS4
WCM1-1202P-BRS4	36	WCM2-1204P-BRS4

Approx.25 g	Approx.23 g

M 12	
●	○
2 mm	4 mm
PTFE Coated Brass	
●	

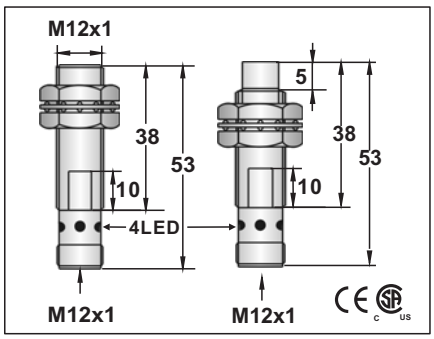

10-30VDC	
<10%	
<10mA	
200mA	
<0.01mA	
-	
-	
<1.5V	
2KHZ	1KHZ
0.1ms/0.1ms	0.2ms/0.2ms
<15%(Sr)	
<1.0%(Sr)	
IP67	
-25 °C - +70 °C	
<10%(Sr)	
YES	
220mA	
<10ms	
RFI>3V/m / EFT>1KV / ESD>4KV (contact)	
IEC 60947-5-2,Part 7.4.1 / IEC 60947-5-2,Part 7.4.2	
ETFE	

WCM1-1202N-ARU4	33	WCM2-1204N-ARU4
WCM1-1202N-BRU4	34	WCM2-1204N-BRU4
WCM1-1202P-ARU4	35	WCM2-1204P-ARU4
WCM1-1202P-BRU4	36	WCM2-1204P-BRU4

Approx.31 g	Approx.30 g

M 18	
●	○
5 mm	8 mm
PTFE Coated Brass	
●	

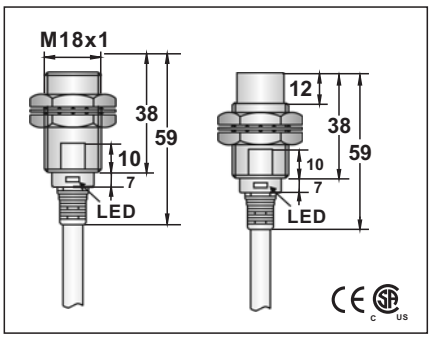

10-30VDC	
<10%	
<10mA	
200mA	
<0.01mA	
-	
-	
<1.5V	
1KHZ	500HZ
0.1ms/0.1ms	0.2ms/0.2ms
<15%(Sr)	
<1.0%(Sr)	
IP67	
-25 °C - +70 °C	
<10%(Sr)	
YES	
220mA	
<10ms	
RFI>3V/m / EFT>1KV / ESD>4KV (contact)	
IEC 60947-5-2,Part 7.4.1 / IEC 60947-5-2,Part 7.4.2	
ETFE	

WCM1-1805N-A3S2	1	WCM2-1808N-A3S2
WCM1-1805N-B3S2	2	WCM2-1808N-B3S2
WCM1-1805P-A3S2	3	WCM2-1808P-A3S2
WCM1-1805P-B3S2	4	WCM2-1808P-B3S2

5.0 ϕ 44x0.1	
Approx.132 g	Approx.134 g

Note:
Coming Soon : Part numbers with underline

DC INDUCTIVE SENSORS WELD FIELD IMMUNE

M18	
●	○
5 mm	8 mm
PTFE Coated Brass	
●	

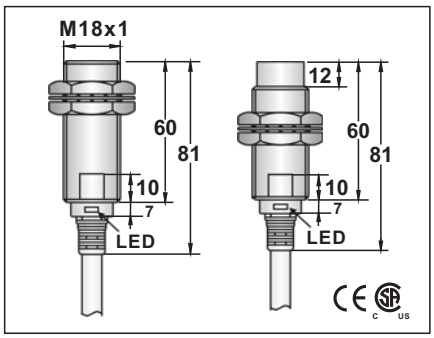

10-30VDC	
<10%	
<10mA	
200mA	
<0.01mA	
-	
-	
<1.5V	
1KHZ	500HZ
0.2ms/0.2ms	0.5ms/0.5ms
<15%(Sr)	
<1.0%(Sr)	
IP67	
-25 °C - +70 °C	
<10%(Sr)	
YES	
220mA	
<10ms	
RFI>3V/m / EFT>1KV / ESD>4KV (contact)	
IEC 60947-5-2,Part 7.4.1 / IEC 60947-5-2,Part 7.4.2	
ETFE	

WCM1-1805N-A3U2	1	WCM2-1808N-A3U2
WCM1-1805N-B3U2	2	WCM2-1808N-B3U2
WCM1-1805P-A3U2	3	WCM2-1808P-A3U2
WCM1-1805P-B3U2	4	WCM2-1808P-B3U2

5.0 ϕ 44x0.1	
Approx.153 g	Approx.144 g

M 18	
●	○
5 mm	8 mm
PTFE Coated Brass	
●	

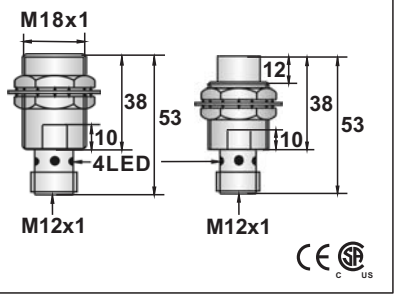

10-30VDC	
<10%	
<10mA	
200mA	
<0.01mA	
-	
-	
<1.5V	
1KHZ	500HZ
0.2ms/0.2ms	0.5ms/0.5ms
<15%(Sr)	
<1.0%(Sr)	
IP67	
-25 °C - +70 °C	
<10%(Sr)	
YES	
220mA	
<10ms	
RFI>3V/m / EFT>1KV / ESD>4KV (contact)	
IEC 60947-5-2,Part 7.4.1 / IEC 60947-5-2,Part 7.4.2	
ETFE	

WCM1-1805N-ARS4	33	WCM2-1808N-ARS4
WCM1-1805N-BRS4	34	WCM2-1808N-BRS4
WCM1-1805P-ARS4	35	WCM2-1808P-ARS4
WCM1-1805P-BRS4	36	WCM2-1808P-BRS4

Approx.50 g	Approx.50 g

M 18	
●	○
5 mm	8 mm
PTFE Coated Brass	
●	

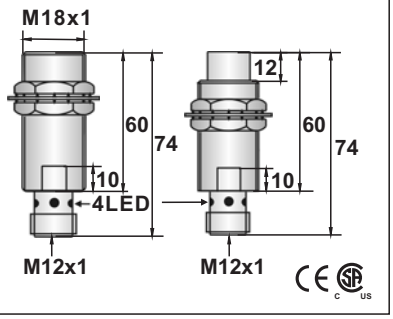

10-30VDC	
<10%	
<10mA	
200mA	
<0.01mA	
-	
-	
<1.5V	
1KHZ	500HZ
0.2ms/0.2ms	0.5ms/0.5ms
<15%(Sr)	
<1.0%(Sr)	
IP67	
-25 °C - +70 °C	
<10%(Sr)	
YES	
220mA	
<10ms	
RFI>3V/m / EFT>1KV / ESD>4KV (contact)	
IEC 60947-5-2,Part 7.4.1 / IEC 60947-5-2,Part 7.4.2	
ETFE	

WCM1-1805N-ARU4	33	WCM2-1808N-ARU4
WCM1-1805N-BRU4	34	WCM2-1808N-BRU4
WCM1-1805P-ARU4	35	WCM2-1808P-ARU4
WCM1-1805P-BRU4	36	WCM2-1808P-BRU4

Approx.94 g	Approx.91 g

Note:
Coming Soon : Part numbers with underline

DC INDUCTIVE SENSORS WELD FIELD IMMUNE

M 18	M 18		M 18	
●	●		●	○
5 mm	5 mm	8 mm	5 mm	8 mm
PTFE Coated Brass	PTFE Coated Brass		PTFE Coated Brass	
●	●		●	

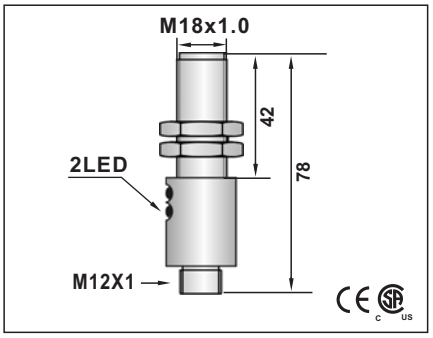

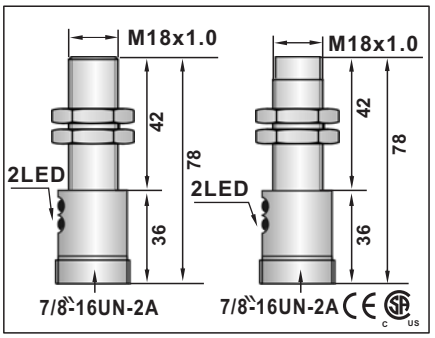

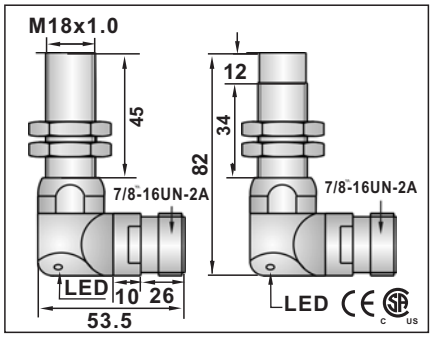

10-30VDC		10-30VDC			10-30VDC			
<10%		<10%			<10%			
<10mA		<10mA			<10mA			
200mA		200mA			200mA			
<0.01mA		<0.01mA			<0.01mA			
-		-			-			
-		-			-			
<1.5V		<1.5V			<1.5V			
1KHZ		1kHZ		500HZ	1KHZ		500HZ	
0.2ms/0.2ms		0.2ms/0.2ms		0.5ms/0.5ms	0.2ms/0.2ms		0.5ms/0.5ms	
<15%(Sr)		<15%(Sr)			<15%(Sr)			
<1.0%(Sr)		<1.0%(Sr)			<1.0%(Sr)			
IP67		IP67			IP67			
-25°C - +70°C		-25°C - +70°C			-25°C - +70°C			
<10%(Sr)		<10%(Sr)			<10%(Sr)			
YES		YES			YES			
220mA		220mA			220mA			
<10ms		<10ms			<10ms			
RFI>3V/m / EFT>1KV / ESD>4KV (contact)		RFI>3V/m / EFT>1KV / ESD>4KV (contact)			RFI>3V/m / EFT>1KV / ESD>4KV (contact)			
IEC 60947-5-2,Part 7.4.1 / IEC 60947-5-2,Part 7.4.2		IEC 60947-5-2,Part 7.4.1 / IEC 60947-5-2,Part 7.4.2			IEC 60947-5-2,Part 7.4.1 / IEC 60947-5-2,Part 7.4.2			
ETFE		ETFE			ETFE			
WCM1-1805N-ARU4/2	33	WCM1-1805N-AZU4/2	41	WCM2-1808N-AZU4/2	WCM1-1805N-AZU4Y	41	WCM2-1808N-AZU4Y	
WCM1-1805N-BRU4/2	34	WCM1-1805N-BZU4/2	42	WCM2-1808N-BZU4/2	WCM1-1805N-BZU4Y	42	WCM2-1808N-BZU4Y	
WCM1-1805P-ARU4/2	35	WCM1-1805P-AZU4/2	43	WCM2-1808P-AZU4/2	WCM1-1805P-AZU4Y	43	WCM2-1808P-AZU4Y	
WCM1-1805P-BRU4/2	36	WCM1-1805P-BZU4/2	44	WCM2-1808P-BZU4/2	WCM1-1805P-BZU4Y	44	WCM2-1808P-BZU4Y	
Approx.94 g		Approx.94 g		Approx.91 g	Approx.251 g		Approx.283 g	

Note:
Coming Soon : Part numbers with underline

DC INDUCTIVE SENSORS WELD FIELD IMMUNE

M 18		M 18	M 18
●	○	●	●
5 mm	8 mm	5 mm	5 mm
PTFE Coated Brass		PTFE Coated Brass	PTFE Coated Brass
●		●	●
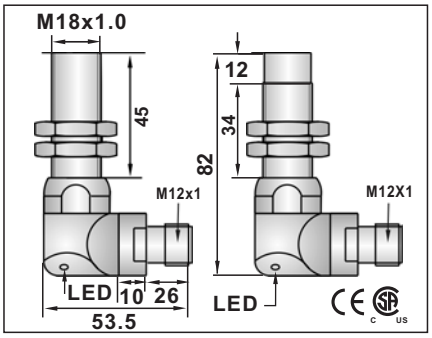		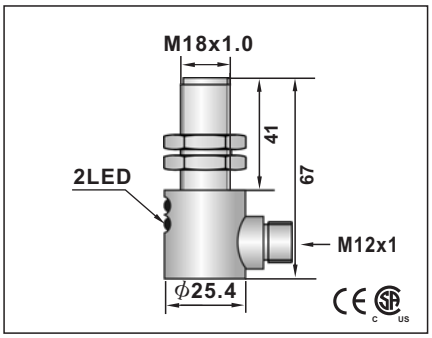	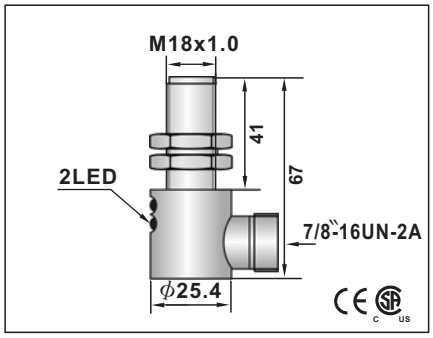
10-30VDC		10-30VDC	10-30VDC
<10%		<10%	<10%
<10mA		<10mA	<10mA
200mA		200mA	200mA
<0.01mA		<0.01mA	<0.01mA
-		-	-
-		-	-
<1.5V		<1.5V	<1.5V
1KHZ	500HZ	1KHZ	1KHZ
0.2ms/0.2ms	0.5ms/0.5ms	0.2ms/0.2ms	0.2ms/0.2ms
<15%(Sr)		<15%(Sr)	<15%(Sr)
<1.0%(Sr)		<1.0%(Sr)	<1.0%(Sr)
IP67		IP67	IP67
-25 °C - +70 °C		-25 °C - +70 °C	-25 °C - +70 °C
<10%(Sr)		<10%(Sr)	<10%(Sr)
YES		YES	YES
220mA		220mA	220mA
<10ms		<10ms	<10ms
RFI>3V/m / EFT>1KV / ESD>4KV (contact)		RFI>3V/m / EFT>1KV / ESD>4KV (contact)	RFI>3V/m / EFT>1KV / ESD>4KV (contact)
IEC 60947-5-2,Part 7.4.1 / IEC 60947-5-2,Part 7.4.2		IEC 60947-5-2,Part 7.4.1 / IEC 60947-5-2,Part 7.4.2	IEC 60947-5-2,Part 7.4.1 / IEC 60947-5-2,Part 7.4.2
ETFE		ETFE	ETFE
WCM1-1805N-ARU4Y	33	WCM1-1805N-ARU4Y/2	33	WCM1-1805N-AZU4Y/2	41
WCM1-1805N-BRU4Y	34	WCM1-1805N-BRU4Y/2	34	WCM1-1805N-BZU4Y/2	42
WCM1-1805P-ARU4Y	35	WCM1-1805P-ARU4Y/2	35	WCM1-1805P-AZU4Y/2	43
WCM1-1805P-BRU4Y	36	WCM1-1805P-BRU4Y/2	36	WCM1-1805P-BZU4Y/2	44
Approx.251 g	Approx.283 g	Approx.94 g	Approx.98 g

Note:
Coming Soon : Part numbers with underline

DC INDUCTIVE SENSORS WELD FIELD IMMUNE

M 30	
●	○
10 mm	15 mm
PTFE Coated Brass	
●	

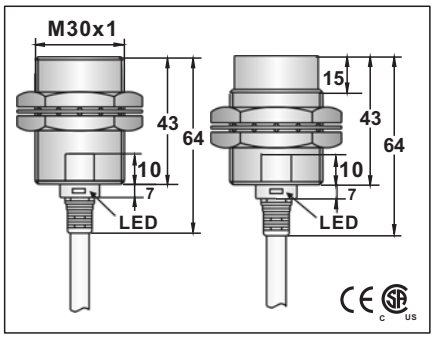

10-30VDC	
<10%	
<10mA	
200mA	
<0.01mA	
-	
-	
<1.5V	
300HZ	150HZ
0.5ms/0.5ms	1.0ms/1.0ms
<15%(Sr)	
<1.0%(Sr)	
IP67	
-25 °C - +70 °C	
<10%(Sr)	
YES	
220mA	
<10ms	
RFI>3V/m / EFT>1KV / ESD>4KV (contact)	
IEC 60947-5-2,Part 7.4.1 / IEC 60947-5-2,Part 7.4.2	
ETFE	

WCM1-3010N-A3S2	1	WCM2-3015N-A3S2
WCM1-3010N-B3S2	2	WCM2-3015N-B3S2
WCM1-3010P-A3S2	3	WCM2-3015P-A3S2
WCM1-3010P-B3S2	4	WCM2-3015P-B3S2

5.8ø 3x0.5	
Approx.217 g	Approx.207 g

M 30	
●	○
10 mm	15 mm
PTFE Coated Brass	
●	

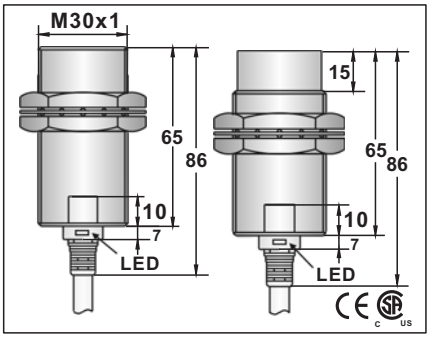

10-30VDC	
<10%	
<10mA	
200mA	
<0.01mA	
-	
-	
<1.5V	
300HZ	150HZ
0.5ms/0.5ms	1.0ms/1.0ms
<15%(Sr)	
<1.0%(Sr)	
IP67	
-25 °C - +70 °C	
<10%(Sr)	
YES	
220mA	
<10ms	
RFI>3V/m / EFT>1KV / ESD>4KV (contact)	
IEC 60947-5-2,Part 7.4.1 / IEC 60947-5-2,Part 7.4.2	
ETFE	

WCM1-3010N-A3U2	1	WCM2-3015N-A3U2
WCM1-3010N-B3U2	2	WCM2-3015N-B3U2
WCM1-3010P-A3U2	3	WCM2-3015P-A3U2
WCM1-3010P-B3U2	4	WCM2-3015P-B3U2

5.8ø 3x0.5	
Approx.227 g	Approx.217 g

M 30	
●	○
10 mm	15 mm
PTFE Coated Brass	
●	

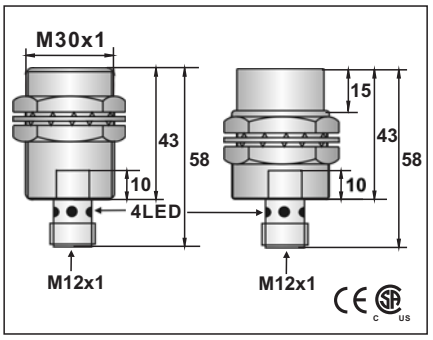

10-30VDC	
<10%	
<10mA	
200mA	
<0.01mA	
-	
-	
<1.5V	
300HZ	150HZ
0.5ms/0.5ms	1ms/1ms
<15%(Sr)	
<1.0%(Sr)	
IP67	
-25° C - +70° C	
<10%(Sr)	
YES	
220mA	
<10ms	
RFI>3V/m / EFT>1KV / ESD>4KV (contact)	
IEC 60947-5-2,Part 7.4.1 / IEC 60947-5-2,Part 7.4.2	
ETFE	

WCM1-3010N-ARS4	33	WCM2-3015N-ARS4
WCM1-3010N-BRS4	34	WCM2-3015N-BRS4
WCM1-3010P-ARS4	35	WCM2-3015P-ARS4
WCM1-3010P-BRS4	36	WCM2-3015P-BRS4

Approx.111 g	Approx.121 g

Note:
Coming Soon : Part numbers with underline

DC INDUCTIVE SENSORS WELD FIELD IMMUNE

M 30			M 30			M 30		
●	○		●	○		●	○	
10 mm	15 mm		10 mm	15 mm		10 mm	15 mm	
PTFE Coated Brass			PTFE Coated Brass			PTFE Coated Brass		
●			●			●		
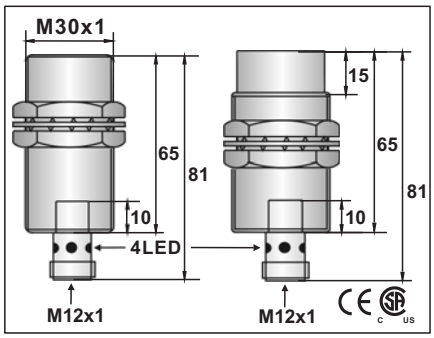			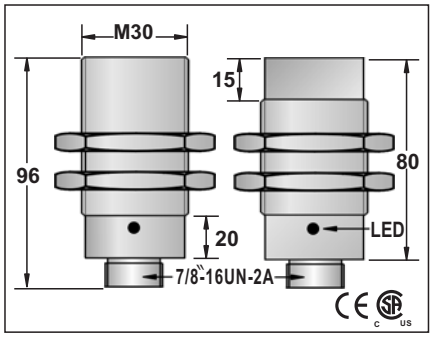			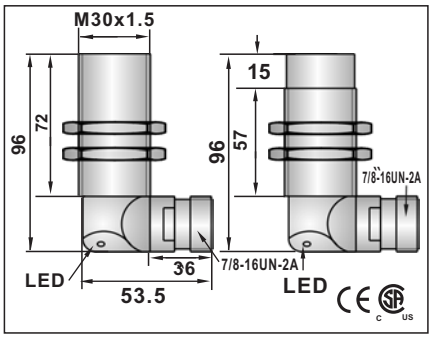		
10-30VDC			10-30VDC			10-30VDC		
<10%			<10%			<10%		
<10mA			<10mA			<10mA		
200mA			200mA			200mA		
<0.01mA			<0.01mA			<0.01mA		
-			-			-		
-			-			-		
<1.5V			<1.5V			<1.5V		
300HZ	150HZ		300HZ	150HZ		0.5ms/0.5ms	1ms/1ms	
0.5ms/0.5ms	1ms/1ms		0.5ms/0.5ms	1ms/1ms		300HZ	150HZ	
<15%(Sr)			<15%(Sr)			<15%(Sr)		
<1.0%(Sr)			<1.0%(Sr)			<1.0%(Sr)		
IP67			IP67			IP67		
-25°C - +70°C			-25°C - +70°C			-25°C - +70°C		
<10%(Sr)			<10%(Sr)			<10%(Sr)		
YES			YES			YES		
220mA			220mA			220mA		
<10ms			<10ms			<10ms		
RFI>3V/m / EFT>1KV / ESD>4KV (contact)			RFI>3V/m / EFT>1KV / ESD>4KV (contact)			RFI>3V/m / EFT>1KV / ESD>4KV (contact)		
IEC 60947-5-2,Part 7.4.1 / IEC 60947-5-2,Part 7.4.2			IEC 60947-5-2,Part 7.4.1 / IEC 60947-5-2,Part 7.4.2			IEC 60947-5-2,Part 7.4.1 / IEC 60947-5-2,Part 7.4.2		
ETFE			PBT			ETFE		
WCM1-3010N-ARU4	33	WCM2-3015N-ARU4	WCM1-3010N-AZU4	41	WCM2-3015N-AZU4	WCM1-3010N-AZU4Y	41	WCM2-3015N-AZU4Y
WCM1-3010N-BRU4	34	WCM2-3015N-BRU4	WCM1-3010N-BZU4	42	WCM2-3015N-BZU4	WCM1-3010N-BZU4Y	42	WCM2-3015N-BZU4Y
WCM1-3010P-ARU4	35	WCM2-3015P-ARU4	WCM1-3010P-AZU4	43	WCM2-3015P-AZU4	WCM1-3010P-AZU4Y	43	WCM2-3015P-AZU4Y
WCM1-3010P-BRU4	36	WCM2-3015P-BRU4	WCM1-3010P-BZU4	44	WCM2-3015P-BZU4	WCM1-3010P-BZU4Y	44	WCM2-3015P-BZU4Y
Approx.187 g	Approx.179 g		Approx.187 g	Approx.179 g		Approx.311 g	Approx.356 g	

Note:
Coming Soon : Part numbers with underline

DC INDUCTIVE SENSORS WELD FIELD IMMUNE

M 30			M 30		M 30	
●	○		●		●	
10 mm	15 mm		10 mm		10 mm	
PTFE Coated Brass			PTFE Coated Brass		PTFE Coated Brass	
●			●		●	

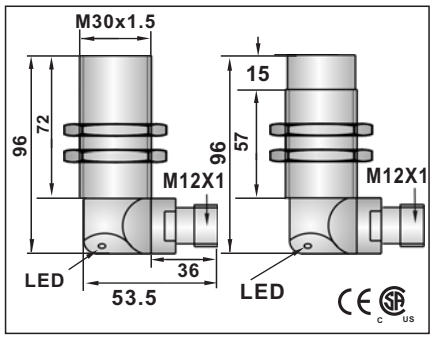

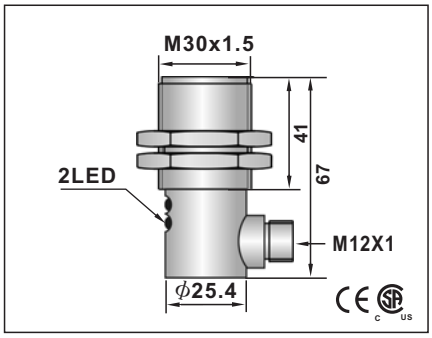

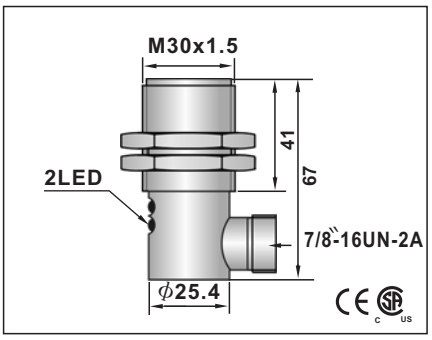

10-30VDC			10-30VDC		10-30VDC	
<10%			<10%		<10%	
<10mA			<10mA		<10mA	
200mA			200mA		200mA	
<0.01mA			<0.01mA		<0.01mA	
-			-		-	
-			-		-	
<1.5V			<1.5V		<1.5V	
300HZ	150HZ		300HZ		300HZ	
0.5ms/0.5ms	1ms/1ms		0.5ms/0.5ms		0.5ms/0.5ms	
<15%(Sr)			<15%(Sr)		<15%(Sr)	
<1.0%(Sr)			<1.0%(Sr)		<1.0%(Sr)	
IP67			IP67		IP67	
-25 °C - +70 °C			-25 °C - +70 °C		-25 °C - +70 °C	
<10%(Sr)			<10%(Sr)		<10%(Sr)	
YES			YES		YES	
220mA			220mA		220mA	
<10ms			<10ms		<10ms	
RFI>3V/m / EFT>1KV / ESD>4KV (contact)			RFI>3V/m / EFT>1KV / ESD>4KV (contact)		RFI>3V/m / EFT>1KV / ESD>4KV (contact)	
IEC 60947-5-2,Part 7.4.1 / IEC 60947-5-2,Part 7.4.2			IEC 60947-5-2,Part 7.4.1 / IEC 60947-5-2,Part 7.4.2		IEC 60947-5-2,Part 7.4.1 / IEC 60947-5-2,Part 7.4.2	
ETFE			ETFE		ETFE	
WCM1-3010N-ARU4Y	33	WCM2-3015N-ARU4Y	WCM1-3010N-ARU4Y/2	33	WCM1-3010N-AZU4Y/2	41
WCM1-3010N-BRU4Y	34	WCM2-3015N-BRU4Y	WCM1-3010N-BRU4Y/2	34	WCM1-3010N-BZU4Y/2	42
WCM1-3010P-ARU4Y	35	WCM2-3015P-ARU4Y	WCM1-3010P-ARU4Y/2	35	WCM1-3010P-AZU4Y/2	43
WCM1-3010P-BRU4Y	36	WCM2-3015P-BRU4Y	WCM1-3010P-BRU4Y/2	36	WCM1-3010P-BZU4Y/2	44
Approx.311 g		Approx.356 g	Approx.250 g		Approx.250 g	

Note:
Coming Soon : Part numbers with underline

DC INDUCTIVE SENSORS WELD FIELD IMMUNE

Q20x32x10	Q20x32x10	Q25x50x10
●	●	●
5 mm	5 mm	5 mm
PTFE Coated die-cast	PTFE Coated die-cast	PTFE Coated die-cast
●	●	●
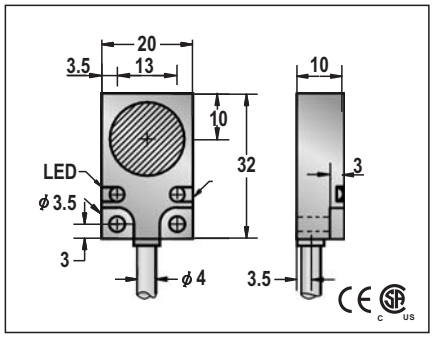	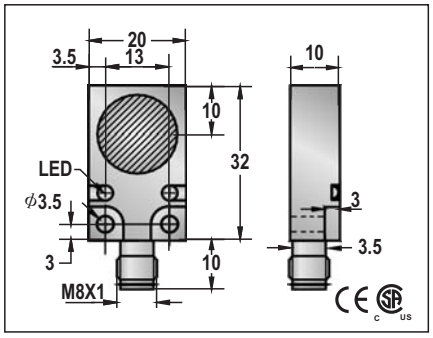	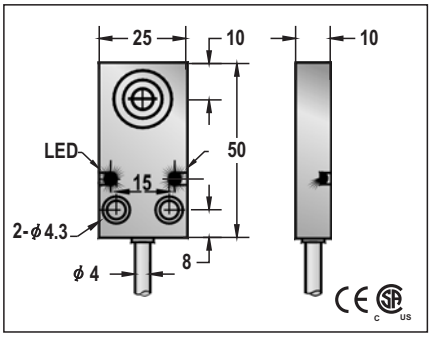
10-30VDC	10-30VDC	10-30VDC
<10%	<10%	<10%
<10mA	<10mA	<10mA
200mA	200mA	200mA
<0.01mA	<0.01mA	<0.01mA
-	-	-
-	-	-
<1.5V	<1.5V	<1.5V
1KHZ	1KHZ	1KHZ
0.2ms/0.2ms	0.2ms/0.2ms	0.2ms/0.2ms
<15%(Sr)	<15%(Sr)	<15%(Sr)
<1.0%(Sr)	<1.0%(Sr)	<1.0%(Sr)
IP67	IP67	IP67
-25°C - +70°C	-25°C - +70°C	-25°C - +70°C
<10%(Sr)	<10%(Sr)	<10%(Sr)
YES	YES	YES
220mA	220mA	220mA
<10ms	<10ms	<10ms
RFI>3V/m / EFT>1KV / ESD>4KV (contact)	RFI>3V/m / EFT>1KV / ESD>4KV (contact)	RFI>3V/m / EFT>1KV / ESD>4KV (contact)
IEC 60947-5-2,Part 7.4.1 / IEC 60947-5-2,Part 7.4.2	IEC 60947-5-2,Part 7.4.1 / IEC 60947-5-2,Part 7.4.2	IEC 60947-5-2,Part 7.4.1 / IEC 60947-5-2,Part 7.4.2
ETFE	ETFE	ETFE
WQM1-2005N-A3U2T 1	WQM1-2005N-ACU3T 29	WQM1-2505N-A3U2T 1
WQM1-2005N-B3U2T 2	WQM1-2005N-BCU3T 29	WQM1-2505N-B3U2T 2
WQM1-2005P-A3U2T 3	WQM1-2005P-ACU3T 30	WQM1-2505P-A3U2T 3
WQM1-2005P-B3U2T 4	WQM1-2005P-BCU3T 30	WQM1-2505P-B3U2T 4
4φ 3x0.15		4 φ 3x0.15
Approx.55 g	Approx.45 g	Approx.100 g

Note:
Coming Soon : Part numbers with underline

DC INDUCTIVE SENSORS WELD FIELD IMMUNE

Q25x50x10	Q40s	Q40s
●	●	●
5 mm	15mm	15mm
PTFE Coated die-cast	PTFE Coated PBT / ALU	PTFE Coated PBT / ALU
●	●	●
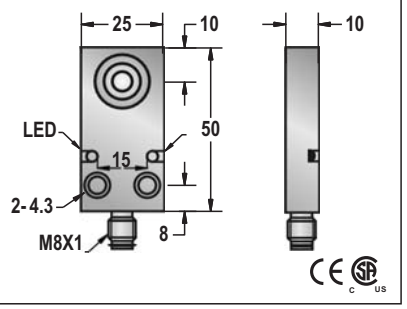	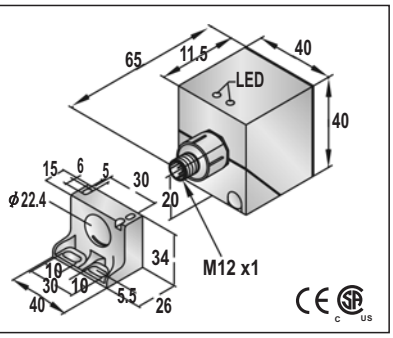	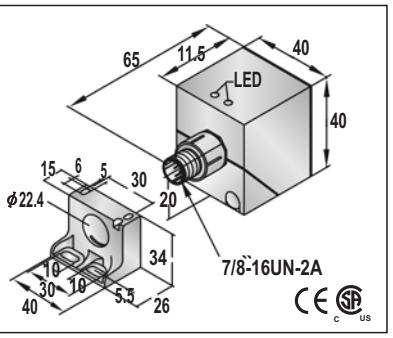
10-30VDC	10-30VDC	10-30VDC
<10%	<10%	<10%
<10mA	<10mA	<10mA
200mA	200mA	200mA
<0.01mA	<0.01mA	<0.01mA
-	-	-
-	-	-
<1.5V	<1.5V	<1.5V
1KHZ	100HZ	100HZ
0.2ms/0.2ms	1ms/1ms	1ms/1ms
<15%(Sr)	<15%	<15%
<1.0%(Sr)	<1.0%(Sr)	<1.0%(Sr)
IP67	IP67	IP67
-25°C - +70°C	-25° C - +70° C	-25° C - +70° C
<10%(Sr)	<10%(Sr)	<10%(Sr)
YES	YES	YES
220mA	220mA	220mA
<10ms	<10ms	<10ms
RFI>3V/m / EFT>1KV / ESD>4KV (contact)	RFI>3V/m / EFT>1KV / ESD>4KV (contact)	RFI>3V/m / EFT>1KV / ESD>4KV (contact)
IEC 60947-5-2,Part 7.4.1 / IEC 60947-5-2,Part 7.4.2	IEC 60947-5-2,Part 7.4.1 / IEC 60947-5-2,Part 7.4.2	IEC 60947-5-2,Part 7.4.1 / IEC 60947-5-2,Part 7.4.2
ETFE	ETFE	ETFE
WQM1-2505N-ACU3 29	WQP1-4015N-ARS4 33	WQP1-4015N-AZS4 41
WQM1-2505N-BCU3 29	WQP1-4015N-BRS4 34	WQP1-4015N-BZS4 42
WQM1-2505P-ACU3 30	WQP1-4015P-ARS4 35	WQP1-4015P-AZS4 43
WQM1-2505P-BCU3 30	WQP1-4015P-BRS4 36	WQP1-4015P-BZS4 44
Approx.61 g	Approx.250g	Approx.250g

Note:
Coming Soon : Part numbers with underline