NAMUR INDUCTIVE PLASTIC HOUSING PROXIMITY SWITCH

M 12		M 18		M30	
●	○	●	○	●	○
2 mm	4 mm	5 mm	8 mm	10 mm	15 mm
PBT RESIN		PBT RESIN		PBT RESIN	
○		○		○	
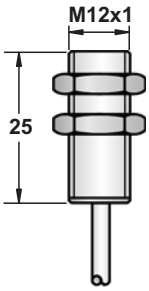		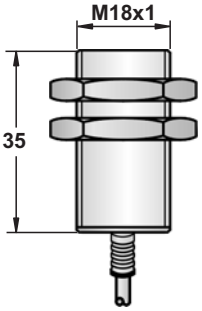		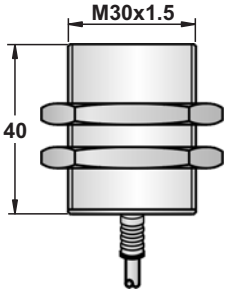	
6-12VDC		6-12VDC		6-12VDC	
-		-		-	
>2.2mA(OFF)	<1.1mA(ON)	>2.2mA(OFF)	<1.1mA(ON)	>2.2mA(OFF)	<1.1mA(ON)
-		-		-	
-		-		-	
-		-		-	
-		-		-	
-		-		-	
1KHZ	500HZ	500HZ	300HZ	300HZ	100HZ
0.1ms/0.1ms	0.2ms/0.2ms	0.2ms/0.2ms	0.5ms/0.5ms	0.5ms/0.5ms	1ms/1ms
<15%(Sr)		<15%(Sr)		<15%(Sr)	
-		-		-	
IP67		IP67		IP67	
-25 °C - +70 °C		-25 °C - +70 °C		-25 °C - +70 °C	
<2%(Sr)		<2%(Sr)		<2%(Sr)	
-		-		-	
-		-		-	
<10ms		<10ms		<10ms	
RFI>3V/m / EFT>1KV / ESD>4KV (contact)		RFI>3V/m / EFT>1KV / ESD>4KV (contact)		RFI>3V/m / EFT>1KV / ESD>4KV (contact)	
IEC 60947-5-2,Part 7.4.1 / IEC 60947-5-2,Part 7.4.2		IEC 60947-5-2,Part 7.4.1 / IEC 60947-5-2,Part 7.4.2		IEC 60947-5-2,Part 7.4.1 / IEC 60947-5-2,Part 7.4.2	
PBT		PBT		PBT	
FCP1-1202NU	21	FCP2-1204NU	FCP1-1805NU	21	FCP2-1808NU	FCP1-3010NU	21	FCP2-3015NU
4ϕ2x0.15			4.8ϕ44x0.1			4.8ϕ44x0.1		
Approx.52 g			Approx.102 g			Approx.131 g		

Note:
Coming Soon : Part numbers with underline

NAMUR INDUCTIVE PLASTIC HOUSING PROXIMITY SWITCH

ϕ20	ϕ34	Q40		
○	○	●	○	○
10 mm	20 mm	15 mm	20 mm	30 mm
PBT RESIN	PBT RESIN	PBT RESIN		
○	○	○		
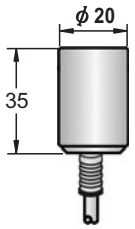	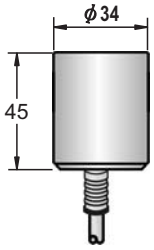	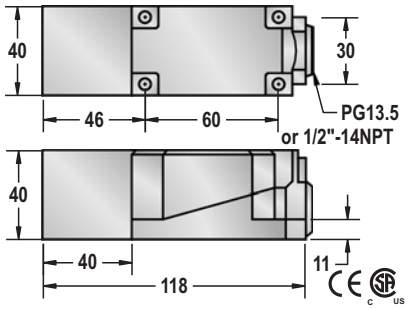		
6-12VDC	6-12VDC	6-12VDC		
-	-	-		
>2.2mA(OFF)	<1.1mA(ON)	>2.2mA(OFF)	<1.1mA(ON)	
-	-	-		
-	-	-		
-	-	-		
-	-	-		
-	-	-		
100HZ	100HZ	100HZ		
1ms/1ms	1ms/1ms	1ms/1ms		
<15%(Sr)	<15%(Sr)	<15%(Sr)		
-	-	-		
IP67	IP67	IP67		
-25°C - +70°C	-25°C - +70°C	-25°C - +70°C		
<2%(Sr)	<2%(Sr)	<2%(Sr)		
-	-	-		
-	-	-		
<10ms	<10ms	<10ms		
RFI>3V/m / EFT>1KV / ESD>4KV (contact)	RFI>3V/m / EFT>1KV / ESD>4KV (contact)	RFI>3V/m / EFT>1KV / ESD>4KV (contact)		
IEC 60947-5-2,Part 7.4.1 / IEC 60947-5-2,Part 7.4.2	IEC 60947-5-2,Part 7.4.1 / IEC 60947-5-2,Part 7.4.2	IEC 60947-5-2,Part 7.4.1 / IEC 60947-5-2,Part 7.4.2		
PBT	PBT	PBT		
FCP2-D2010NU	21	FCP2-D3420NU	21	FQP1-4015NU / FQP2-4020NU / FQP2-4030NU	21
4.8ϕ44x0.1	4.8ϕ44x0.1			
Approx.90 g	Approx.112 g	Approx.242 g		

Note:
Coming Soon : Part numbers with underline