Q30x45x12、Q40x50x17、Q35x55x15

DC CAPACITIVE PROXIMITY SWITCH PLASTIC HOUSING SQUARE CONNECTOR TYPE

Q30x45x12		Q40x50x17		Q35x55x15	
●	○	●	○	●	○
2-20mm (adjustable)	**2-30mm** (adjustable)	**2-30mm** (adjustable)	**2-40mm** (adjustable)	**2-25mm** (adjustable)	**2-35mm** (adjustable)
PBT RESIN		PBT RESIN		PBT RESIN	
●		●		●	

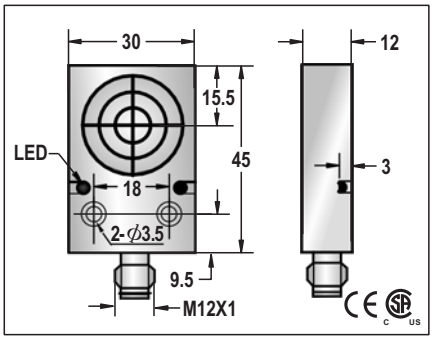

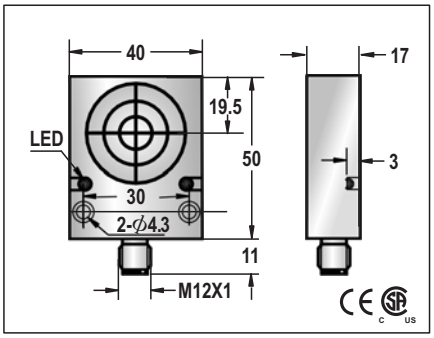

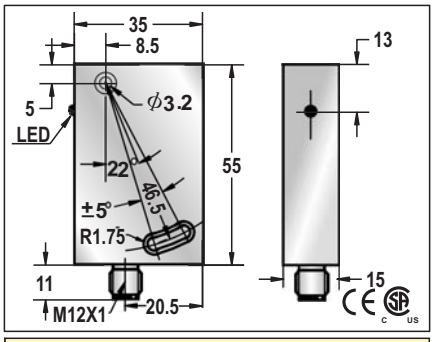

10-30VDC	10-30VDC	10-30VDC
<10%	<10%	<10%
<10m A	<10m A	<10m A
300mA	300m A	300m A
<0.01m A	<0.01m A	<0.01m A
-	-	-
-	-	-
<2 VDC	<2 VDC	<2 VDC
100HZ	100HZ	100HZ
1.5ms/1.5ms	1.5ms/1.5ms	1.5ms/1.5ms
<15%(Sr)	<15%(Sr)	<15%(Sr)
<5%(Sr)	<5%(Sr)	<5%(Sr)
IP67	IP67	IP67
-25°C—+70°C	-25°C—+70°C	-25°C—+70°C
<10%(Sr)	<10%(Sr)	<10%(Sr)
YES	YES	YES
350mA	350mA	350mA
<25ms	<25ms	<25ms
RFI>3V/m / EFT>1KV / ESD>4KV (contact)	RFI>3V/m / EFT>1KV / ESD>4KV (contact)	RFI>3V/m / EFT>1KV / ESD>4KV (contact)
IEC 60947-5-2,Part 7.4.1 / IEC 60947-5-2,Part 7.4.2	IEC 60947-5-2,Part 7.4.1 / IEC 60947-5-2,Part 7.4.2	IEC 60947-5-2,Part 7.4.1 / IEC 60947-5-2,Part 7.4.2
PBT	PBT	PBT

CQP1-3120N-ARU4T	33	CQP2-3130N-ARU4T	CQP1-4130N-ARU4T	33	CQP2-4140N-ARU4T	CQP1-3525N-ARU4T	33	CQP2-3535N-ARU4T
CQP1-3120N-BRU4T	34	CQP2-3130N-BRU4T	CQP1-4130N-BRU4T	34	CQP2-4140N-BRU4T	CQP1-3525N-BRU4T	34	CQP2-3535N-BRU4T
CQP1-3120P-ARU4T	35	CQP2-3130P-ARU4T	CQP1-4130P-ARU4T	35	CQP2-4140P-ARU4T	CQP1-3525P-ARU4T	35	CQP2-3535P-ARU4T
CQP1-3120P-BRU4T	36	CQP2-3130P-BRU4T	CQP1-4130P-BRU4T	36	CQP2-4140P-BRU4T	CQP1-3525P-BRU4T	36	CQP2-3535P-BRU4T
CQP1-3120P-SRU4T	38	CQP2-3130P-SRU4T	CQP1-4130P-SRU4T	38	CQP2-4140P-SRU4T	CQP1-3525P-SRU4T	38	CQP2-3535P-SRU4T
CQP1-3120N-SRU4T	37	CQP2-3130N-SRU4T	CQP1-4130N-SRU4T	37	CQP2-4140N-SRU4T	CQP1-3525N-SRU4T	37	CQP2-3535N-SRU4T

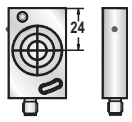

sensing face.

approx.65g	approx.85g	approx.75g

DC CAPACITIVE PROXIMITY SWITCH PLASTIC HOUSING SQUARE CONNECTOR TYPE

Q80	Q50	Q60
○	○	○
5-50mm (adjustable)	**2-30mm** (adjustable)	**2-40mm** (adjustable)
PBT RESIN	PBT RESIN	PBT RESIN
●	●	●

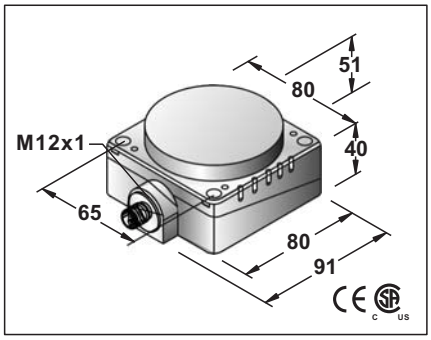

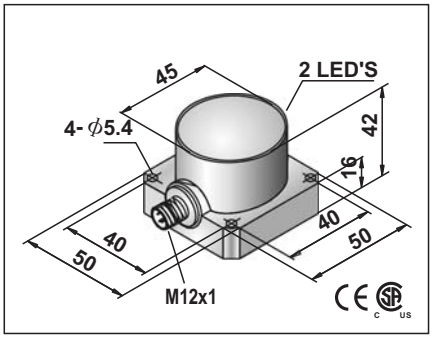

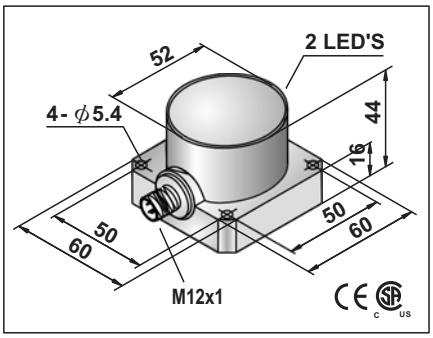

Q80	Q50	Q60
10-30VDC	10-30VDC	10-30VDC
<10%	<10%	<10%
<10mA	<10mA	<10mA
300mA	300mA	300mA
<0.01mA	<0.01mA	<0.01mA
-	-	-
-	-	-
<2 VDC	<2 VDC	<2 VDC
100HZ	100HZ	100HZ
1.5ms/1.5ms	1.5ms/1.5ms	1.5ms/1.5ms
<15%(Sr)	<15%(Sr)	<15%(Sr)
<5%(Sr)	<5%(Sr)	<5%(Sr)
IP67	IP67	IP67
-25°C—+70°C	-25°C—+70°C	-25°C—+70°C
<10%(Sr)	<10%(Sr)	<10%(Sr)
YES	YES	YES
350mA	350mA	350mA
<25ms	<25ms	<25ms
RFI>3V/m / EFT>1KV / ESD>4KV (contact)	RFI>3V/m / EFT>1KV / ESD>4KV (contact)	RFI>3V/m / EFT>1KV / ESD>4KV (contact)
IEC 60947-5-2,Part 7.4.1 / IEC 60947-5-2,Part 7.4.2	IEC 60947-5-2,Part 7.4.1 / IEC 60947-5-2,Part 7.4.2	IEC 60947-5-2,Part 7.4.1 / IEC 60947-5-2,Part 7.4.2
PBT	PBT	PBT

CQP2-8050N-ARU4T	33	CQP2-5030N-ARU4T	33	CQP2-6040N-ARU4T	33
CQP2-8050N-BRU4T	34	CQP2-5030N-BRU4T	34	CQP2-6040N-BRU4T	34
CQP2-8050P-ARU4T	35	CQP2-5030P-ARU4T	35	CQP2-6040P-ARU4T	35
CQP2-8050P-BRU4T	36	CQP2-5030P-BRU4T	36	CQP2-6040P-BRU4T	36
CQP2-8050P-SRU4T	38	CQP2-5030P-SRU4T	38	CQP2-6040P-SRU4T	38
CQP2-8050N-SRU4T	37	CQP2-5030N-SRU4T	37	CQP2-6040N-SRU4T	37

Q80	Q50	Q60
4ϕ3x0.15	4ϕ3x0.15	4ϕ3x0.15
approx.100g	approx.70g	approx.80g

Note:
Coming Soon : Part numbers with underline