AC CAPACITIVE PLASTIC HOUSING PROXIMITY SWITCH

M18		
●	○	
2-8 mm adjustable	2-15 mm adjustable	
PBT RESIN		
●		
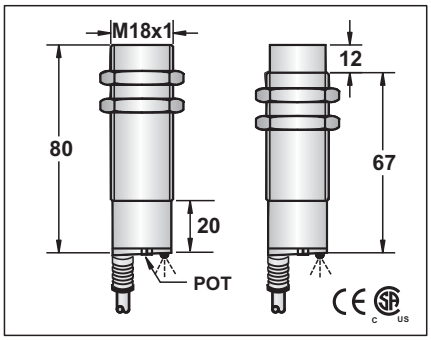		
20-250VAC		
-		
<2.5mA		
300mA		
<2.5mA		
5A		
5mA		
<9VAC AT 300MA		
25HZ		
10ms/10ms		
<15%(Sr)		
<5%(Sr)		
IP67		
-25°C－+70°C		
<10%(Sr)		
-		
-		
-		
RFI>3V/m / EFT>1KV / ESD>4KV (contact)		
IEC 60947-5-2,Part 7.4.1 / IEC 60947-5-2,Part 7.4.2		
PBT		
CCP1-1808A-A2L2	9	CCP2-1815A-A2L2
CCP1-1808A-B2L2	10	CCP2-1815A-B2L2
5.0ϕ44x0.1		
approx.92g	approx.94g	

M30		
●	○	
2-20 mm adjustable	2-30 mm adjustable	
PBT RESIN		
●		
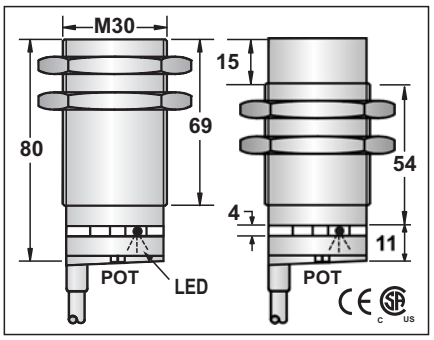		
20-250VAC		
-		
<2.5mA		
300mA		
<2.5mA		
5A		
5mA		
<9VAC AT 300MA		
25HZ		
10ms/10ms		
<15%(Sr)		
<5%(Sr)		
IP67		
-25°C－+70°C		
<10%(Sr)		
-		
-		
-		
RFI>3V/m / EFT>1KV / ESD>4KV (contact)		
IEC 60947-5-2,Part 7.4.1 / IEC 60947-5-2,Part 7.4.2		
PBT		
CCP1-3020A-A2L2	9	CCP2-3030A-A2L2
CCP1-3020A-B2L2	10	CCP2-3030A-B2L2
5.8ϕ2x0.5		
approx.197g	approx.195g	

ϕ20		
●	○	
2-12 mm adjustable	2-20 mm adjustable	
PBT RESIN		
●		
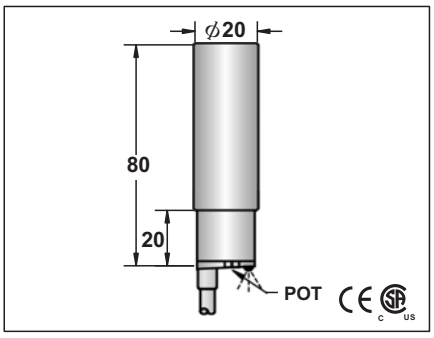		
20-250VAC		
-		
<2.5mA		
300mA		
<2.5mA		
5A		
5mA		
<9VAC AT 300MA		
25HZ		
10ms/10ms		
<15%(Sr)		
<5%(Sr)		
IP67		
-25°C－+70°C		
<10%(Sr)		
-		
-		
-		
RFI>3V/m / EFT>1KV / ESD>4KV (contact)		
IEC 60947-5-2,Part 7.4.1 / IEC 60947-5-2,Part 7.4.2		
PBT		
CCP1-D2012A-A2L2	9	CCP2-D2020A-A2L2
CCP1-D2012A-B2L2	10	CCP2-D2020A-B2L2
5.8ϕ2x0.5		
approx.153g	approx.154g	

AC CAPACITIVE PLASTIC HOUSING PROXIMITY SWITCH

ϕ34	
●	○
2-25mm adjustable	2-35mm adjustable
PBT RESIN	
●	

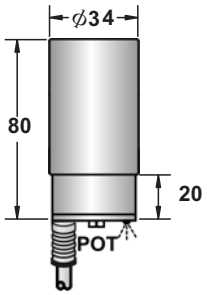

20-250VAC	
-	
<2.5mA	
300mA	
<2.5mA	
5A	
5mA	
<9VAC AT 300MA	
25HZ	
10ms/10ms	
<15%(Sr)	
<5%(Sr)	
IP67	
-25°C–+70°C	
<10%(Sr)	
-	
-	
-	
RFI>3V/m / EFT>1KV / ESD>4KV (contact)	
IEC 60947-5-2,Part 7.4.1 / IEC 60947-5-2,Part 7.4.2	
PBT	

CCP1-D3425A-A2L2	9	CCP2-D3435A-A2L2
CCP1-D3425A-B2L2	10	CCP2-D3435A-B2L2

5.8ϕ2x0.5	
approx.248g	approx.251g