PART T-01 ~ T-05

NAMUR CAPACITIVE PROXIMITY SWITCH

Diameter	ϕ6.5	M 8	ϕ11	
● Shielded ○ non-Shielded	○	○	●	○
Switching Distance Sn mm	1.5 mm	1.5 mm	1-5 mm	1-6 mm
Housing Material	stainless steel or nickel plated brass	stainless steel or nickel plated brass	stainless steel or nickel plated brass	
● With LED ○ Without LED	●	●	○	
Dimensions (unit: mm)	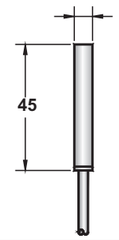	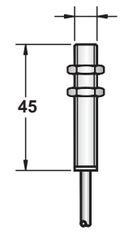	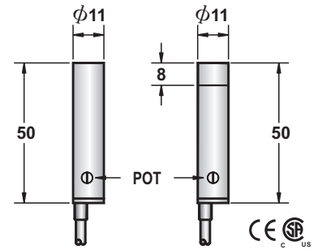	
Operating Voltage	6-12VDC	6-12VDC	6-12VDC	
Ripple	>2.2mA(ON) <1.1mA(OFF)	>2.2mA(ON) <1.1mA(OFF)	>2.2mA(ON) <1.1mA(OFF)	
No Load Current	-	-	-	
Max. Load Current	-	-	-	
Leakge Current	-	-	-	
Surge Current	-	-	-	
Min. Load Current	-	-	-	
Voltage Drop	-	-	-	
Switching Frequency	500HZ	2KHZ	1KHZ	500HZ
Response Time	0.2ms/0.2ms	0.05ms/0.05ms	0.1ms/0.1ms	0.2ms/0.2ms
Switching Hysteresis	<15%	<15%	<15%	
Repeat Accuracy	<1.0%(Sr)	<1.0%(Sr)	<1.0%(Sr)	
Protection Category	IP67	IP67	IP67	
Operating Temperature	-25°C– +70°C	-25°C– +70°C	-25°C– +70°C	
Temperature Drift	<5%(Sr)	<5%(Sr)	<5%(Sr)	
Short Circuit Protection	-	-	-	
Overload Trip Point	-	-	-	
Time Delay Before Availability	-	-	-	
EMC	RFI>3V/m / EFT>1KV / ESD>4KV (contact)	RFI>3V/m / EFT>1KV / ESD>4KV (contact)	RFI>3V/m / EFT>1KV / ESD>4KV (contact)	
Shock / Vibration	IEC 60947-5-2,Part 7.4.1 / IEC 60947-5-2,Part 7.4.2	IEC 60947-5-2,Part 7.4.1 / IEC 60947-5-2,Part 7.4.2	IEC 60947-5-2,Part 7.4.1 / IEC 60947-5-2,Part 7.4.2	
Material Active Face	POM	POM	POM	
DC 3 wire 10-30V NPN N.O.				
DC 3 wire 10-30V NPN N.C.				
DC 3 wire 10-30V PNP N.O.				
DC 3 wire 10-30V PNP N.C.				
DC 4 wire 10-30V Changeover PNP (N.O. & N.C.)				
DC 4 wire 10-30V Changeover NPN (N.O. & N.C.)				
DC 2 wire 10-60V N.O.				
DC 2 wire 10-60V N.C.				
DC 3 wire 10-55v NPN N.O. or NAMUR	CCM1-D0601NU 21	CCM1-0801NU 21	CCM1-D1105NU 21	CCM2-D1106NU
DC 3 wire 10-55v NPN N.C.				
DC 3 wire 10-55v PNP N.O.				
DC 3 wire 10-55v PNP N.C.				
AC 2 wire 20-250V N.O.				
AC 2 wire 20-250V N.C.				
AC 2 wire 20-250V N.O. or N.C. Changeable				
AC/DC 2 wire 20-250V N.O.				
AC/DC 2 wire 20-250V N.C.				
AC/DC 2 wire 20-250V N.O. or N.C. Changeable				
Remark				
Cable 2M (PVC)	3ϕ2x0.15	3ϕ2x0.15	4ϕ2x0.15	
Weight	approx.36g	approx.38g	approx.56g	approx.55g

Note:
Coming Soon : Part numbers with underline

NAMUR CAPACITIVE PROXIMITY SWITCH

M 12		M 18		M 30	
●	○	●	○	●	○
1-5 mm	1-6 mm	1-8 mm	2-10 mm	2-15 mm	2-20 mm
stainless steel or nickel plated brass		stainless steel or nickel plated brass		stainless steel or nickel plated brass	
○		○		○	
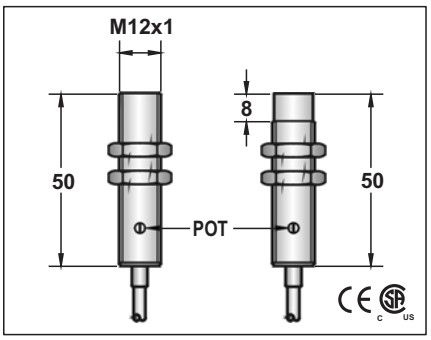		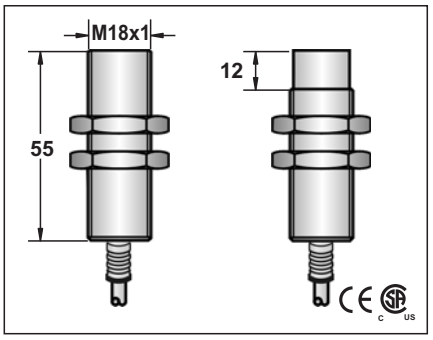		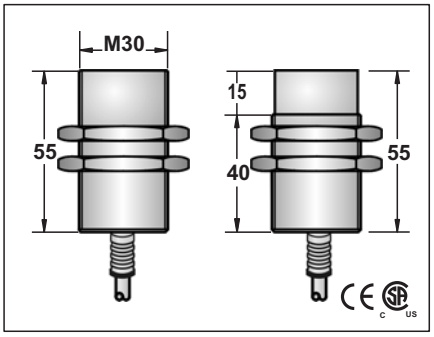	
6-12VDC		6-12VDC		6-12VDC	
>2.2mA(ON)	<1.1mA(OFF)	>2.2mA(ON)	<1.1mA(OFF)	>2.2mA(ON)	<1.1mA(OFF)
-		-		-	
-		-		-	
-		-		-	
-		-		-	
-		-		-	
-		-		-	
1KHZ	500HZ	500HZ	300HZ	300HZ	100HZ
0.1ms/0.1ms	0.2ms/0.2ms	0.2ms/0.2ms	0.5ms/0.5ms	0.5ms/0.5ms	1ms/1ms
<15%		<15%		<15%	
<1.0%(Sr)		<1.0%(Sr)		<1.0%(Sr)	
IP67		IP67		IP67	
-25°C– +70°C		-25°C– +70°C		-25°C– +70°C	
<5%(Sr)		<5%(Sr)		<5%(Sr)	
-		-		-	
-		-		-	
-		-		-	
RFI>3V/m / EFT>1KV / ESD>4KV (contact)		RFI>3V/m / EFT>1KV / ESD>4KV (contact)		RFI>3V/m / EFT>1KV / ESD>4KV (contact)	
IEC 60947-5-2,Part 7.4.1 / IEC 60947-5-2,Part 7.4.2		IEC 60947-5-2,Part 7.4.1 / IEC 60947-5-2,Part 7.4.2		IEC 60947-5-2,Part 7.4.1 / IEC 60947-5-2,Part 7.4.2	
POM	PBT	PBT		PBT	
CCM1-1205NU	21 CCM2-1206NU	CCM1-1808NU	21 CCM2-1810NU	CCM1-3015NU	21 CCM2-3020NU
4∅2x0.15		5.0∅44x0.1		5.8∅2x0.5	
approx.66g	approx.65g	approx.153g	approx.144g	approx.217g	approx.207g

Note:
Coming Soon : Part numbers with underline