MLD25

NPN/PNP

IP30

Optional parts

STZ-013

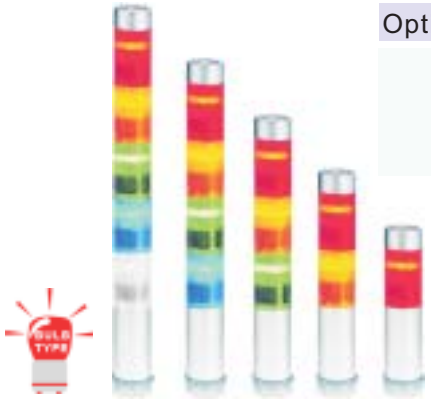

Optional parts

STZ-013

Dimensions & Wiring Example

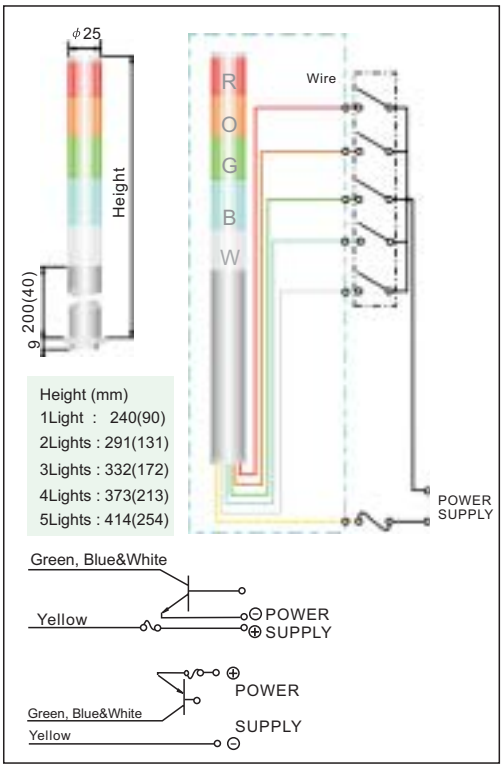

Describing

- LED colours: Super-high-intensity Red, Super-high-intensity Orange, Super-high-intensity Green, Super-high-intensity Blue, Super-high-intensity -White.
  Bulb: Red, Orange, Green, Blue, White(combination in photo is standard; for other combinations, please contact us).
- Lens: Polycarbonate resin with superior resistance to impact and heat.
- The CSA & CE marking is available. The CSA approval number is 219967-143081.
- Prism-cut lens disperses the light source, improving visibility.
- Various kinds of information can be displayed by using different colours controlled by several(1 to 5) external signals.
- The body made of corrosion-resistant aluminum remains beautiful for a long time.
- Parallel pipe screw size used for threads of main body fixing part, Direct connection to flexible cable duct, etc.
- This model contains open-collector type NPN, PNP transistor which allows Direct connection to Programmable Controller.(24V type only)
- Vibration Resistance:10~55HZ Frequency,0.5mm amplitude in Y direction for 40 minutes.
- Shock resistance 500m/s^2 acceleration(approx.50G)in Y direction for three times.
- Custom body model is available as an extra cost option.

Type

LED type

Style	Rated Voltage	Wattage	Model Continuous Light	Wire type
1Light	AC/DC 24V	1W	MLD25-LA0F-11	Power source and Lead wire UL AWM1430 105° 300V VW-1 AWG20
2Light	AC/DC 24V	2W	MLD25-LA0F-21	
3Light	AC/DC 24V	3W	MLD25-LA0F-31	
4Light	AC/DC 24V	4W	MLD25-LA0F-41	
5Light	AC/DC 24V	5W	MLD25-LA0F-51	

Bulb type

Style	Rated Voltage	Bulb	Model Continuous Light	Wire type
1 Light	AC/DC 12V	12V 3W	MLD25-BA0C-11	Power source and Lead wire UL AWM1430 105° 300V VW-1 AWG20
	AC/DC 24V	24V 3W	MLD25-BA0F-11	
	AC 110V	110V 5W	MLD25-BA0M-11	
2 Light	AC/DC 12V	12V 3W	MLD25-BA0C-21	
	AC/DC 24V	24V 3W	MLD25-BA0F-21	
	AC 110V	110V 5W	MLD25-BA0M-21	
3 Light	AC/DC 12V	12V 3W	MLD25-BA0C-31	
	AC/DC 24V	24V 3W	MLD25-BA0F-31	
	AC 110V	110V 5W	MLD25-BA0M-31	
4 Light	AC/DC 12V	12V 3W	MLD25-BA0C-41	
	AC/DC 24V	24V 3W	MLD25-BA0F-41	
	AC 110V	110V 5W	MLD25-BA0M-41	
5 Light	AC/DC 12V	12V 3W	MLD25-BA0C-51	
	AC/DC 24V	24V 3W	MLD25-BA0F-51	
	AC 110V	110V 5W	MLD25-BA0M-51	

Semi-manufactured goods order guide(for LED only)

Light Units Order

MLD25+AD24+WHITE

MLD25+AD24+BLUE

MLD25+AD24+GREEN

MLD25+AD24+ORANGE

MLD25+AD24+RED

MLD25+AD24+GREEN

- **Series No.**
- **Rate Voltage**
  AD24:AC/DC24V only
- **Light Colour**
  RED
  GREEN
  BLUE
  ORANGE
  WHITE

Top Cap Order

MLD25+TL

Main Body Order

Long Screw Order

Layer	Length	P/N
1	62	MLD25-S1
2	103	MLD25-S2
3	144	MLD25-S3
4	185	MLD25-S4
5	226	MLD25-S5

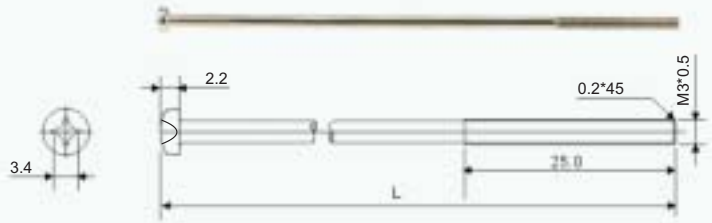

Assemble Guide

LED. Modules are interchangeable

Changing the colour configuration does not require re-wiring.

Note: When the same colour of LED modules are on one light tower, they will light simultaneously.

The colour of the LED. Module will always correspond to the colour of the wire

The wiring remains the same

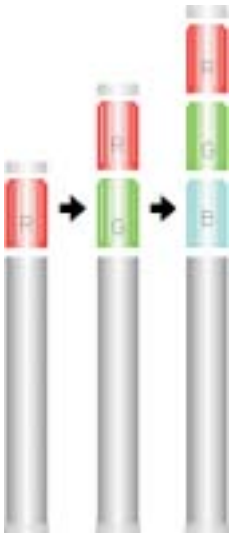

Easy adding or removing

Up to five different colours can be stacked. The LED modules are easy to add or remove even after installation.

Note: Purchase of an add-on kit is required to add another colour.

MLD40

Vibration Resistant

NPN/PNP

IP20

Optional parts

Optional parts

Dimensions

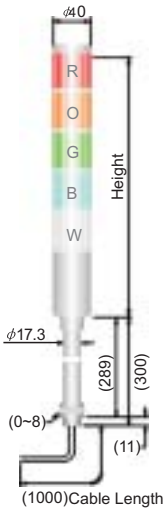

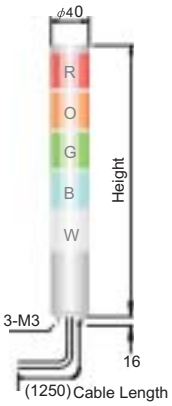

Height (mm)	
1Light	: 121
2Lights	: 176
3Lights	: 232
4Lights	: 287
5Lights	: 342

Height (mm)	
1Ligh t	: 166
2Lights	: 221
3Lights	: 277
4Lights	: 332
5Lights	: 387

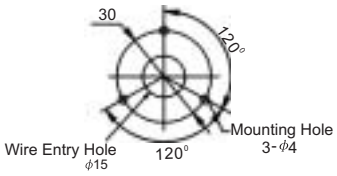

Wiring Diagram In Direct Power Connection

Continuous type

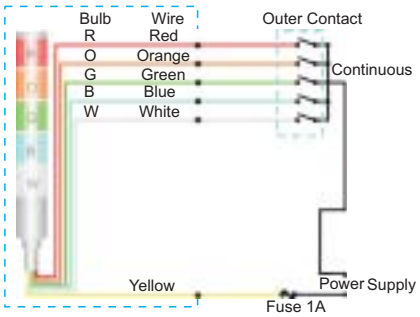

Flashing type

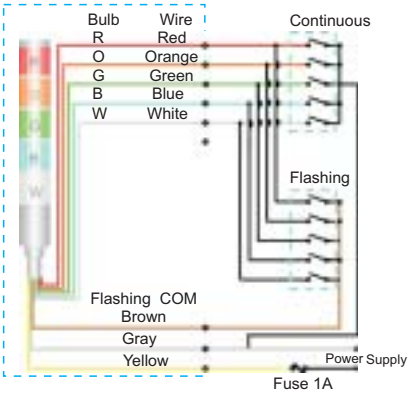

Wire colour

Bulb Unit Colour	Wire Colour
Red Unit	Red Wire
Orange Unit	Orange Wire
Green Unit	Green Wire
Blue Unit	Blue Wire
White Unit	White Wire

24V DC Type

NPN transistor

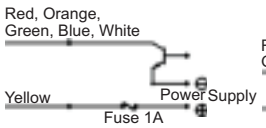

PNP transistor

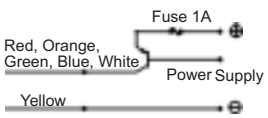

SIGNAL TOWER

Describing

- Colours: Red, Orange, Green, Blue, White .
- Lens: Polycarbonate resin with superior resistance to impact and heat.
- The unique vibration absorbing structure using new materials helps reduce vibration and impact from all machines and devices, greatly extending bulb life.
- Colour combinations can be easily changed.
- Prism-cut lens disperses the light source, improving visibility.
- Various types of information can be displayed by using different colours controlled by several (1 to 5) external signals.
- The CSA & CE marking is available. The CSA approval number is 219967-143081.
- This series has Continuous and Continuous/Flashing type according to operation methods.
- This series has Normal, With pole, Paint, Paint and with pole type according to Distinguish code.
- For details information please refer to selection guide.
- Vibration Resistance:10~55HZ Frequency,0.5mm amplitude in Y direction for 40 minutes.
- Shock resistance 500m/s^2 acceleration(approx.50G)in Y direction for three times.

Type

With pole

Style	Rated Voltage	Bulb	Model		Wire type
			Continuous Light	Continuous/Flashing Light	
1 Light	AC/DC 12V	12V 3W	MLD40-BA1C-11	MLD40-BC1C-11	Power source and Lead wire UL AWM1430 105^0 300V VW-1 AWG20
	AC/DC 24V	24V 3W	MLD40-BA1F-11	MLD40-BC1F-11	
	AC 110V	110V 5W	MLD40-BA1M-11	MLD40-BC1M-11	
	AC 220V	240V5W	MLD40-BA1N-11	MLD40-BC1N-11	
2 Light	AC/DC 12V	12V 3W	MLD40-BA1C-21	MLD40-BC1C-21	
	AC/DC 24V	24V 3W	MLD40-BA1F-21	MLD40-BC1F-21	
	AC 110V	110V 5W	MLD40-BA1M-21	MLD40-BC1M-21	
	AC 220V	240V5W	MLD40-BA1N-21	MLD40-BC1N-21	
3 Light	AC/DC 12V	12V 3W	MLD40-BA1C-31	MLD40-BC1C-31	
	AC/DC 24V	24V 3W	MLD40-BA1F-31	MLD40-BC1F-31	
	AC 110V	110V 5W	MLD40-BA1M-31	MLD40-BC1M-31	
	AC 220V	240V5W	MLD40-BA1N-31	MLD40-BC1N-31	
4 Light	AC/DC 12V	12V 3W	MLD40-BA1C-41	MLD40-BC1C-41	
	AC/DC 24V	24V 3W	MLD40-BA1F-41	MLD40-BC1F-41	
	AC 110V	110V 5W	MLD40-BA1M-41	MLD40-BC1M-41	
	AC 220V	240V5W	MLD40-BA1N-41	MLD40-BC1N-41	
5 Light	AC/DC 12V	12V 3W	MLD40-BA1C-51	MLD40-BC1C-51	
	AC/DC 24V	24V 3W	MLD40-BA1F-51	MLD40-BC1F-51	
	AC 110V	110V 5W	MLD40-BA1M-51	MLD40-BC1M-51	
	AC 220V	240V5W	MLD40-BA1N-51	MLD40-BC1N-51	

Without pole

Style	Rated Voltage	Bulb	Model		Wire type
			Continuous Light	Continuous/Flashing Light	
1 Light	AC/DC 12V	12V 3W	MLD40-BA0C-11	MLD40-BC0C-11	Power source and Lead wire UL AWM1430 105^0 300V VW-1 AWG20
	AC/DC 24V	24V 3W	MLD40-BA0F-11	MLD40-BC0F-11	
	AC 110V	110V 5W	MLD40-BA0M-11	MLD40-BC0M-11	
	AC 220V	240V5W	MLD40-BA0N-11	MLD40-BC0N-11	
2 Light	AC/DC 12V	12V 3W	MLD40-BA0C-21	MLD40-BC0C-21	
	AC/DC 24V	24V 3W	MLD40-BA0F-21	MLD40-BC0F-21	
	AC 110V	110V 5W	MLD40-BA0M-21	MLD40-BC0M-21	
	AC 220V	240V5W	MLD40-BA0N-21	MLD40-BC0N-21	
3 Light	AC/DC 12V	12V 3W	MLD40-BA0C-31	MLD40-BC0C-31	
	AC/DC 24V	24V 3W	MLD40-BA0F-31	MLD40-BC0F-31	
	AC 110V	110V 5W	MLD40-BA0M-31	MLD40-BC0M-31	
	AC 220V	240V5W	MLD40-BA0N-31	MLD40-BC0N-31	
4 Light	AC/DC 12V	12V 3W	MLD40-BA0C-41	MLD40-BC0C-41	
	AC/DC 24V	24V 3W	MLD40-BA0F-41	MLD40-BC0F-41	
	AC 110V	110V 5W	MLD40-BA0M-41	MLD40-BC0M-41	
	AC 220V	240V5W	MLD40-BA0N-41	MLD40-BC0N-41	
5 Light	AC/DC 12V	12V 3W	MLD40-BA0C-51	MLD40-BC0C-51	
	AC/DC 24V	24V 3W	MLD40-BA0F-51	MLD40-BC0F-51	
	AC 110V	110V 5W	MLD40-BA0M-51	MLD40-BC0M-51	
	AC 220V	240V5W	MLD40-BA0N-51	MLD40-BC0N-51	

MLD40

NPN/PNP

IP30

LED TYPE

Optional parts

STZ-012 STZ-011

Optional parts

STLP-001 STZ-014

Dimensions

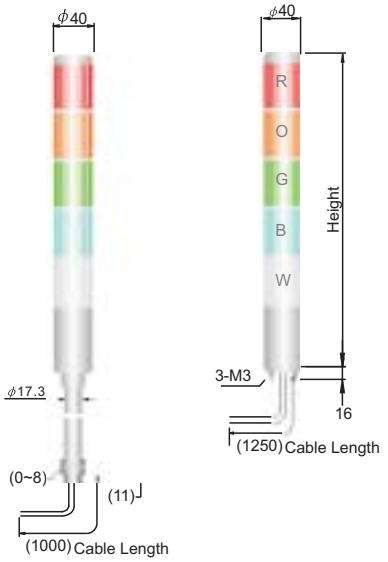

Height (mm)	
1Ligh t	: 166
2Lights	: 221
3Lights	: 277
4Lights	: 332
5Lights	: 387

Height (mm)	
1Light	: 121
2Lights	: 176
3Lights	: 232
4Lights	: 287
5Lights	: 342

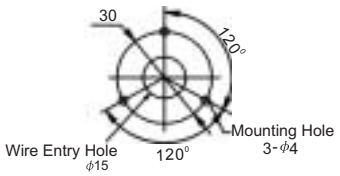

Wiring Diagram In Direct Power Connection

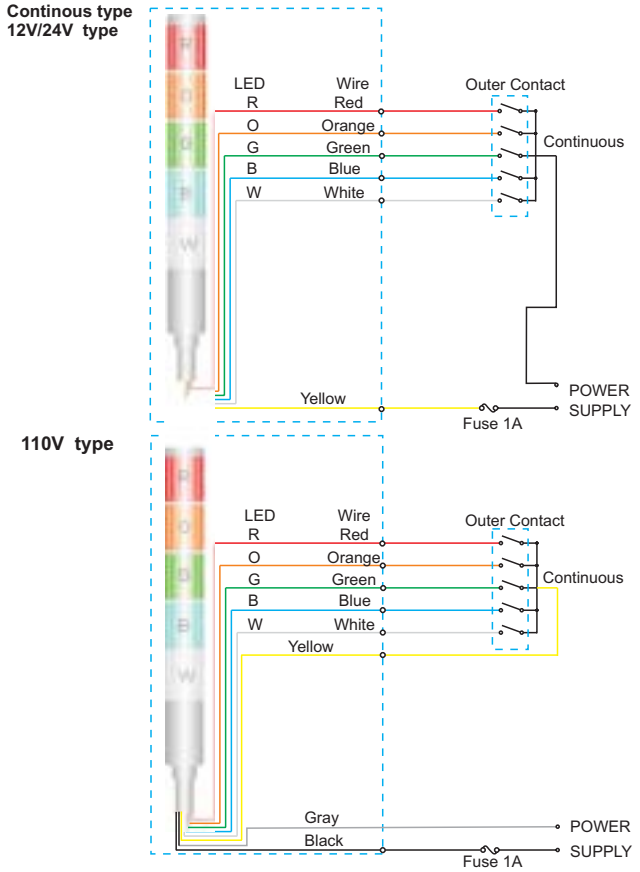

Wire colour

LED Unit Colour	Wire Colour
Red Unit	Red Wire
Orange Unit	Orange Wire
Green Unit	Green Wire
Blue Unit	Blue Wire
White Unit	White Wire

24V DC Type

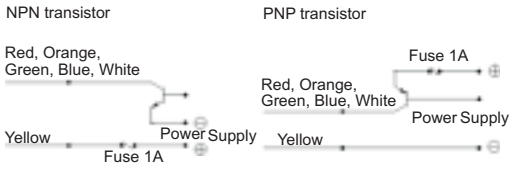

SIGNAL TOWER

Describing

- Colours: Super-high-intensity Red, Super-high-intensity Orange, Super-high-intensity Green, Super-high -intensity Blue, super-high-intensity White.
- Lens: Polycarbonate resin with superior resistance to impact and heat.
- Our newly developed LED reflection system, improved luminosity and ends the problem of burned out bulbs. Due to the newly designed structure with independent colour unit, colour combinations can be easily changed.
- Prism-cut lens disperses the light source, improving visibility.
- This model contains open-collector type NPN, PNP transistor which allows direct connection to Programmable Controller. (24V type only)
- The CSA & CE marking is available. The CSA approval number is 219967-143081.
- This series has continuous type according to operation methods.
- This series has normal, with pole type according to Distinguish code.
- For details information, please refer to selection guide.
- Vibration Resistance: 10~55HZ Frequency, 0.5mm amplitude in Y direction for 40 minutes.
- Shock resistance 500m/s^2 acceleration(approx.50G)in Y direction for three times.

Type

With pole

Style	Rated Voltage	Wattage	Model Continuous Light	Wire type
1 Light	AC/DC 24V	2W	MLD40-LA1F-11	Power source and Lead wire UL AWM1430 105° 300V VW-1 AWG20
	AC 110V	2.5W	MLD40-LA1M-11	
2 Light	AC/DC 24V	4W	MLD40-LA1F-21	
	AC 110V	5W	MLD40-LA1M-21	
3 Light	AC/DC 24V	6W	MLD40-LA1F-31	
	AC 110V	7.5W	MLD40-LA1M-31	
4 Light	AC/DC 24V	8W	MLD40-LA1F-41	
	AC 110V	10W	MLD40-LA1M-41	
5 Light	AC/DC 24V	10W	MLD40-LA1F-51	
	AC 110V	12.5W	MLD40-LA1M-51	

Without pole

Style	Rated Voltage	Wattage	Model Continuous Light	Wire type
1 Light	AC/DC 24V	2W	MLD40-LA0F-11	Power source and Lead wire UL AWM1430 105° 300V VW-1 AWG20
	AC 110V	2.5W	MLD40-LA0M-11	
2 Light	AC/DC 24V	4W	MLD40-LA0F-21	
	AC 110V	5W	MLD40-LA0M-21	
3 Light	AC/DC 24V	6W	MLD40-LA0F-31	
	AC 110V	7.5W	MLD40-LA0M-31	
4 Light	AC/DC 24V	8W	MLD40-LA0F-41	
	AC 110V	10W	MLD40-LA0M-41	
5 Light	AC/DC 24V	10W	MLD40-LA0F-51	
	AC 110V	12.5W	MLD40-LA0M-51	

Semi-manufactured goods order guide

Light Units Order

MOD40+AD24+RED

MOD40+AD24+ORANGE

MOD40+AD24+GREEN

MOD40+AD24+BLUE

MOD40+AD24+WHITE

MOD40+AD24+GREEN

- **Series No.**
- **Rate Voltage** AD24:AC/DC24V only
- **Light Colour** Red, Green, Blue, Orange, White

Top Cap Order

MLD40+TL

Main Body Order

Model type+M
(E.g.: MLD40-LE1F-11+M)

Long Screw Order

Layer	A1(PCS)	A2(PCS)	P/N
1	1	0	MLD40-S1
2	1	1	MLD40-S2
3	1	2	MLD40-S3
4	1	3	MLD40-S4
5	1	4	MLD40-S5

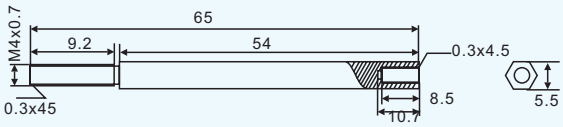

A1 (P/N: MLD40-A1)

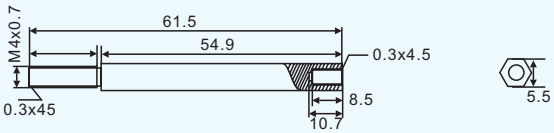

A2 (P/N: MLD40-A2)

Assemble Guide

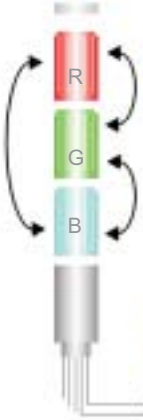

LED. Modules are interchangeable

Changing the colour configuration does not require re-wiring. Note: When the same colour of LED modules are on one light tower, they will light simultaneously.

The wiring remains the same

The colour of the LED. Module will always correspond to the colour of the wire

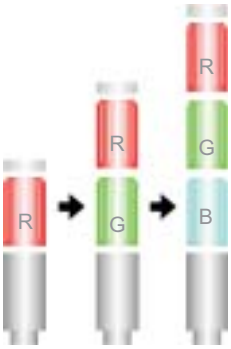

Easy adding or removing

Up to five different colours can be stacked. The LED modules are easy to add or remove even after installation.

Note: Purchase of an add-on kit is required to add another colour.

MAD40

2 different sound 80dB/m | Vibration Resistant | NPN/PNP | IP20

Optional parts

STZ-014

Optional parts

STZ-013 STZ-010 STZ-017

Dimensions

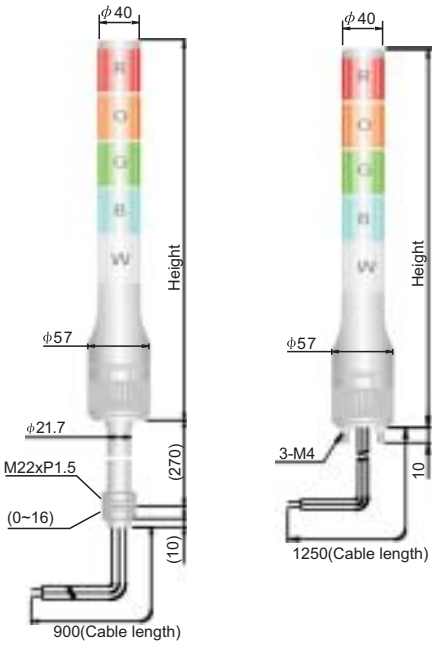

Height (mm)	
1Light	: 185
2Lights	: 240
3Lights	: 295
4Lights	: 350
5Lights	: 405

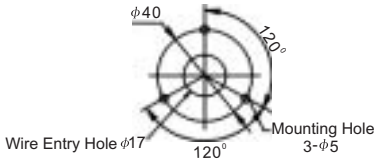

Wiring Diagram In Direct Power Connection

Continuous type

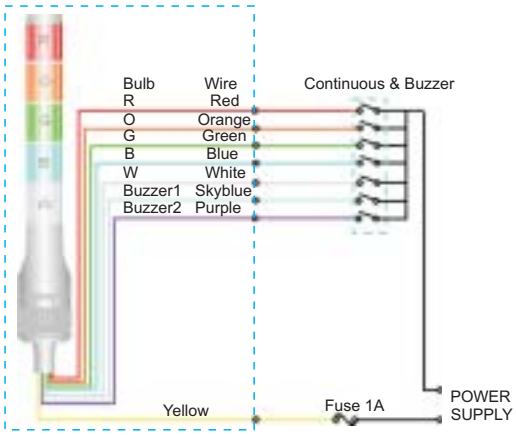

Flashing type

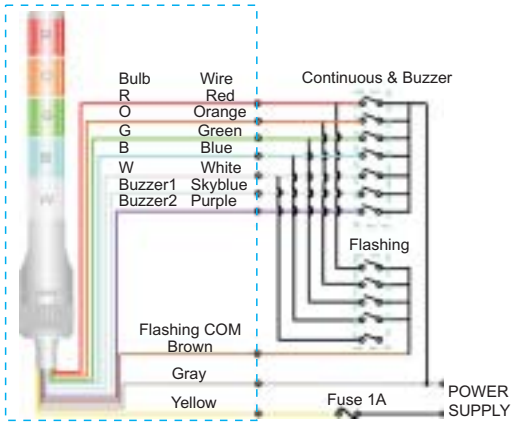

Wire colour

Bulb Unit Colour	Wire Colour
Red Unit	Red Wire
Orange Unit	Orange Wire
Green Unit	Green Wire
Blue Unit	Blue Wire
White Unit	White Wire

Open collector (24VDC)

NPN transistor

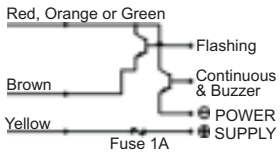

PNP transistor

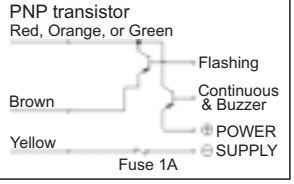

Describing

- Colours: Red, Orange, Green, Blue, White (combination in photo is standard; for other combinations, please Contact us)
- Lens: Polycarbonate resin with superior resistance to impact and heat.
- The unique vibration absorbing structure using new materials helps reduce vibration and impact from all machines and devices, greatly extending bulb life.
- The buzzer has 2 different gentle sounds high volume: 80dB/m.
- Colour combinations can be easily changed.
- Prism-cut lens disperses the light source, improving visibility.
- This model contains open-collector type NPN, PNP transistor which allows direct connection to Programmable Controller. (24V type only).
- Various types of information can be displayed by using different colours controlled by several (1 to 5) external signals.
- The CSA & CE marking is available. The CSA approval number is 219967-143081.
- This series has Continuous Light with warning sound and Continuous/Flashing Light with warning sound type According to operation methods.
- This series has normal, with pole type according to Distinguish code.
- For details information, please refer to selection guide.
- Vibration Resistance: 10~55HZ Frequency, 0.5mm amplitude in Y direction for 40 minutes.
- Shock resistance 500m/s^2 acceleration(approx.50G)in Y direction for three times.

Type

With pole

Style	Rated Voltage	Bulb	Model		Wire type
			Continuous Light With Warning Sound	Continuous/Flashing Light With Warning Sound	
1 Light	AC/DC 24V	24V 3W	MAD40-BD1F-11	MAD40-BF1F-11	Power source and Lead wire UL AWM1430 105° 300V VW-1 AWG20
	AC 110V	110V 5W	MAD40-BD1M-11	MAD40-BF1M-11	
	AC 220V	240V5W	MAD40-BD1N-11	MAD40-BF1N-11	
2 Light	AC/DC 24V	24V 0.11A	MAD40-BD1F-21	MAD40-BF1F-21	
	AC 110V	110V 5W	MAD40-BD1M-21	MAD40-BF1M-21	
	AC 220V	240V5W	MAD40-BD1N-21	MAD40-BF1N-21	
3 Light	AC/DC 24V	24V 3W	MAD40-BD1F-31	MAD40-BF1F-31	
	AC 110V	110V 5W	MAD40-BD1M-31	MAD40-BF1M-31	
	AC 220V	240V5W	MAD40-BD1N-31	MAD40-BF1N-31	
4 Light	AC/DC 24V	24V 3W	MAD40-BD1F-41	MAD40-BF1F-41	
	AC 110V	110V 5W	MAD40-BD1M-41	MAD40-BF1M-41	
	AC 220V	240V5W	MAD40-BD1N-41	MAD40-BF1N-41	
5 Light	AC/DC 24V	24V 3W	MAD40-BD1F-51	MAD40-BF1F-51	
	AC 110V	110V 5W	MAD40-BD1M-51	MAD40-BF1M-51	
	AC 220V	240V5W	MAD40-BD1N-51	MAD40-BF1N-51	

Without pole

Style	Rated Voltage	Bulb	Model		Wire type
			Continuous Light With Warning Sound	Continuous/Flashing Light With Warning Sound	
1 Light	AC/DC 24V	24V 3W	MAD40-BD0F-11	MAD40-BF0F-11	Power source and Lead wire UL AWM1430 105° 300V VW-1 AWG20
	AC 110V	110V 5W	MAD40-BD0M-11	MAD40-BF0M-11	
	AC 220V	240V5W	MAD40-BD0N-11	MAD40-BF0N-11	
2 Light	AC/DC 24V	24V 3W	MAD40-BD0F-21	MAD40-BF0F-21	
	AC 110V	110V 5W	MAD40-BD0M-21	MAD40-BF0M-21	
	AC 220V	240V5W	MAD40-BD0N-21	MAD40-BF0N-21	
3 Light	AC/DC 24V	24V 3W	MAD40-BD0F-31	MAD40-BF0F-31	
	AC 110V	110V 5W	MAD40-BD0M-31	MAD40-BF0M-31	
	AC 220V	240V5W	MAD40-BD0N-31	MAD40-BF0N-31	
4 Light	AC/DC 24V	24V 3W	MAD40-BD0F-41	MAD40-BF0F-41	
	AC 110V	110V 5W	MAD40-BD0M-41	MAD40-BF0M-41	
	AC 220V	240V5W	MAD40-BD0N-41	MAD40-BF0N-41	
5 Light	AC/DC 24V	24V 3W	MAD40-BD0F-51	MAD40-BF0F-51	
	AC 110V	110V 5W	MAD40-BD0M-51	MAD40-BF0M-51	
	AC 220V	240V5W	MAD40-BD0N-51	MAD40-BF0N-51	

MAD40

2 different sound 80dB/m | Vibration Resistant | NPN/PNP | IP20

Optional parts

STZ-014

Optional parts

STZ-013 STZ-010 STZ-017

Dimensions

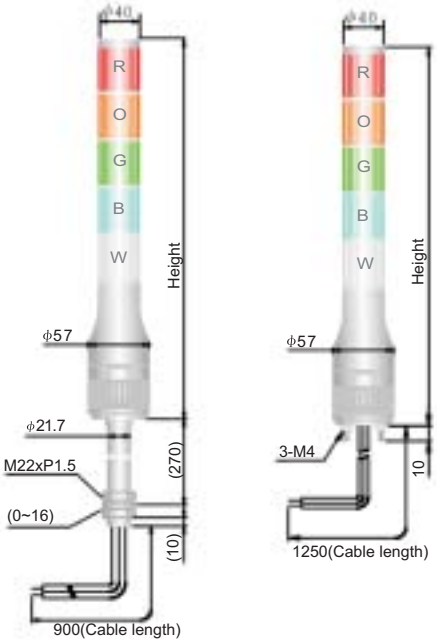

Height (mm)	
1Light	: 185
2Lights	: 240
3Lights	: 295
4Lights	: 350
5Lights	: 405

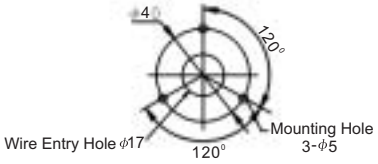

Wiring Diagram In Direct Power Connection

Continuous Type

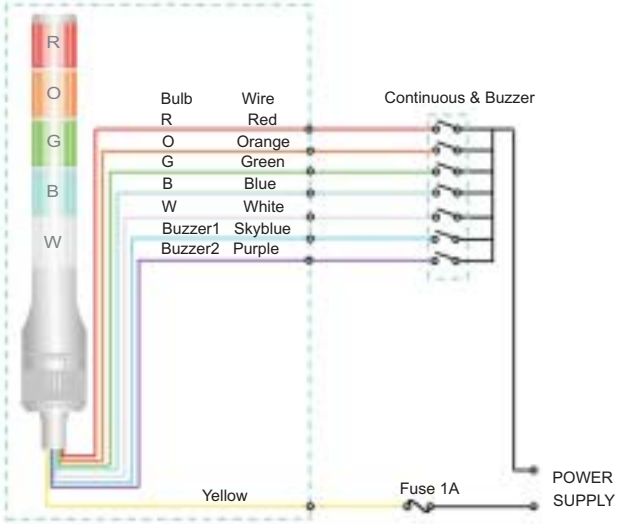

Wire Colour

LED Unit Colour	Wire Colour
Red Unit	Red Wire
Orange Unit	Orange Wire
Green Unit	Green Wire
Blue Unit	Blue Wire
White Unit	White Wire

Five wires(Red,Orange,Green,Blue,White) are connected regardless of the number of LED Unit.

Open Collector (24V)

NPN Transistor
Red, Orange or Green

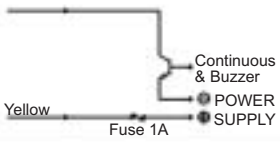

PNP Transistor
Red, Orange, or Green

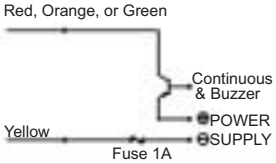

Describing

- Colours: Super-high-intensity Red, Super-high-intensity Orange, Super-high-intensity Green, Super-high -intensity Blue, Super-high-intensity White (combination in photo is standard, for other combinations, please contact us).
- Lens: Polycarbonate resin with superior resistance to impact and heat.
  Various types of information can be displayed by using different colours controlled by several (1 to 5) external signals.
- Our LED reflection system, improved luminosity and ends the problem of burned out bulbs.
- The buzzer has 2 different gentle sounds high volume; 80dB/m
- Colour combinations can be easily changed.
- This model contains open-collector type NPN, PNP transistor which allows direct connection to Programmable Controller.(24V type only)
- Customer poles up to 1000mm long are available as an extra cost option.
- The CSA & CE marking is available. The CSA approval number is 219967-143081.
- This series only has continuous light with warning sound according to operation method.
- This series has Normal, With pole, Paint, according to Distinguish code.
- For details information please refer to selection guide.
- Vibration Resistance:10~55HZ Frequency,0.5mm amplitude in Y direction for 40 minutes.
- Shock resistance 500m/s^2 acceleration(approx.50G)in Y direction for three times.

Type

With pole

Style	Rated Voltage	Wattage	Model Continuous Light With Warning Sound	Wire type
1 Light	AC/DC 24V	2W	MAD40-LD1F-11	Power source and Lead wire UL AWM1430 105° 300V VW-1 AWG20
	AC 110V	2.5W	MAD40-LD1M-11	
2 Light	AC/DC 24V	4W	MAD40-LD1F-21	
	AC 110V	5W	MAD40L-D1M-21	
3 Light	AC/DC 24V	6W	MAD40-LD1F-31	
	AC 110V	7.5W	MAD40-LD1M-31	
4 Light	AC/DC 24V	8W	MAD40-LD1F-41	
	AC 110V	10W	MAD40-LD1M-41	
5 Light	AC/DC 24V	10W	MAD40-LD1F-51	
	AC 110V	12.5W	MAD40-LD1M-51	

Without pole

Style	Rated Voltage	Wattage	Model Continuous Light With Warning Sound	Wire type
1 Light	AC/DC 24V	2W	MAD40-LD0F-11	Power source and Lead wire UL AWM1430 105° 300V VW-1 AWG20
	AC 110V	2.5W	MAD40-LD0M-11	
2 Light	AC/DC 24V	4W	MAD40-LD0F-21	
	AC 110V	5W	MAD40L-D0M-21	
3 Light	AC/DC 24V	6W	MAD40-LD0F-31	
	AC 110V	7.5W	MAD40-LD0M-31	
4 Light	AC/DC 24V	8W	MAD40-LD0F-41	
	AC 110V	10W	MAD40-LD0M-41	
5 Light	AC/DC 24V	10W	MAD40-LD0F-51	
	AC 110V	12.5W	MAD40-LD0M-51	

Semi-manufactured goods order guide

Light Units Order

MOD40+AD24+RED

MOD40+AD24+ORANGE

MOD40+AD24+GREEN

MOD40+AD24+BLUE

MOD40+AD24+WHITE

MOD40+AD24+GREEN

- Series No.
- Rate Voltage: AD24:AC/DC24V only
- Light Colour: RED, GREEN, BLUE, ORANGE, WHITE

Top Cap Order

MAD40+TL

MainBody Order

Model type+M
(E.g.: MAD40-LD1F-11+M)

Long Screw Order

Layer	A1(PCS)	A2(PCS)	P/N
1	1	0	MAD40-S1
2	1	1	MAD40-S2
3	1	2	MAD40-S3
4	1	3	MAD40-S4
5	1	4	MAD40-S5

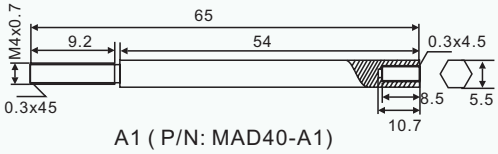

A1 (P/N: MAD40-A1)

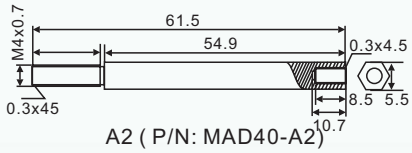

A2 (P/N: MAD40-A2)

Assemble Guide

LED. Modules are interchangeable

Changing the colour configuration does not require re-wiring.

Note: When the same colour of LED modules are on one light tower, they will light simultaneously.

The wiring remains the same

The colour of the LED. Module will always correspond to the colour of the wire

Easy adding or removing

Up to five different colours can be stacked. The LED modules are easy to add or remove even after installation.

Note: Purchase of an add-on kit is required to add another colour.

MOD50

2 different sounds 85dB/m | NPN/PNP | IP54

Optional parts

STZ-014

Optional parts

STZ-012

STZ-011

Dimensions

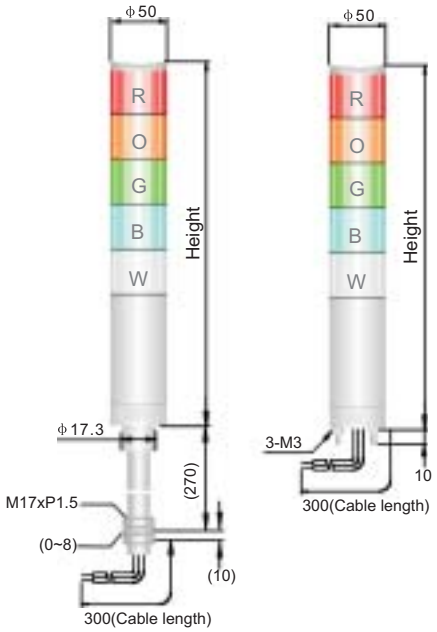

Height (mm)	
1Light	: 135
2Lights	: 165
3Lights	: 195
4Lights	: 225
5Lights	: 255

Height (mm)	
1Light	: 205
2Lights	: 235
3Lights	: 265
4Lights	: 295
5Lights	: 325

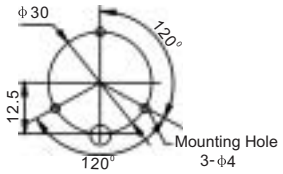

Wiring Diagram In Direct Power Connection

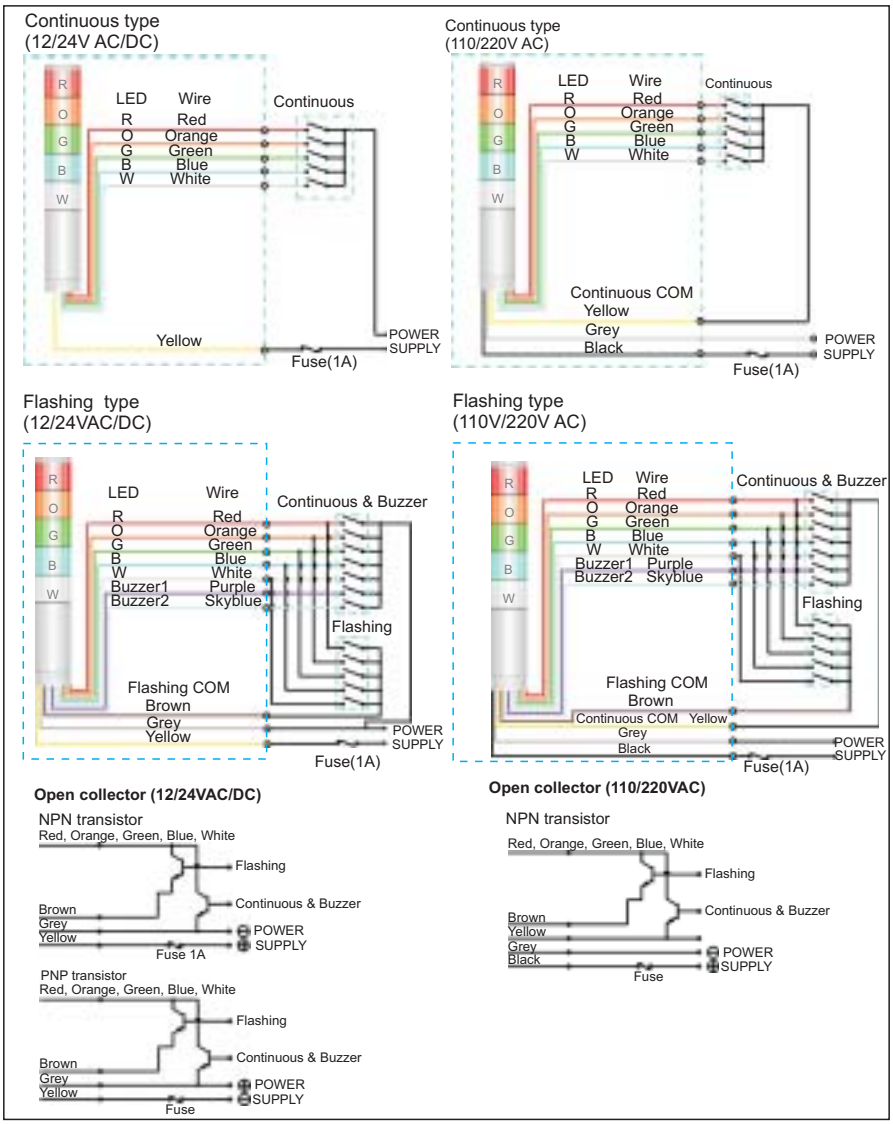

SIGNAL TOWER

Describing

- Colours: Super-high-intensity Red, Super-high-intensity Orange, Super-high-intensity Green, Super-high -intensity Blue, Super-high-intensity White(combination in photo is standard, for other combinations, please contact us.)
- Lens: Acrylic resin with superior weather resistance and light translucence.
- Due to the newly developed double-reflection system, use of just one unit ensures visibility.
- A simple unified system ensures a low product cost combined with a reduced consumption of electricity.
- Due to the use of LEDs, there is no need to replace burned out bulbs.
- Prism-cut lens disperses the light source, improving visibility, an improved visibility from below lift and right.`
- Water and dust proof, conforms to international standard IP54, Can be used indoors and outdoors equally well.
- The buzzer has 2 different gentle sounds high volume;85dB/m
- Because of the unified structure, the colour combinations can be easily changed.
- This model contains open-collector type NPN, PNP transistors which allow direct connection to programmable Controller.The NPN open collector is available in 100V and 220V models.
- The CSA & CE marking is available. The CSA approval number is 219967-143081.
- This series has Continuous Light and Continuous /Flashing with waring sound type according to operation methods.
- This series has normal, with pole type according to Distinguish code.
- For details information, please refer to selection guide.
- Vibration Resistance:10~55HZ Frequency,0.5mm amplitude in Y direction for 40 minutes.
- Shock resistance 500m/s^2 acceleration(approx.50G)in Y direction for three times.

Type

With pole

Style	Rated Voltage	Wattage	Model		Wire type
			Continuous Light	Continuous/Flashing Light With Warning Sound	
1 Light	AC/DC 12V	0.6W	MOD50-LA1C-11	MOD50-LF1C-11	Power source and Lead wire UL AWM1430 105° 300V VW-1 AWG20
	AC/DC 24V		MOD50-LA1F-11	MOD50-LF1F-11	
	AC 110V	3.4W	MOD50-LA1M-11	MOD50-LF1M-11	
	AC 220V		MOD50-LA1N-11	MOD50-LF1N-11	
2 Light	AC/DC 12V	1.2W	MOD50-LA1C-21	MOD50-LF1C-21	
	AC/DC 24V		MOD50-LA1F-21	MOD50-LF1F-21	
	AC 110V	4.3W	MOD50-LA1M-21	MOD50-LF1M-21	
	AC 220V		MOD50-LA1N-21	MOD50-LF1N-21	
3 Light	AC/DC 12V	1.7W	MOD50-LA1C-31	MOD50-LF1C-31	
	AC/DC 24V		MOD50-LA1F-31	MOD50-LF1F-31	
	AC 110V	5.2W	MOD50-LA1M-31	MOD50-LF1M-31	
	AC 220V		MOD50-LA1N-31	MOD50-LF1N-31	
4 Light	AC/DC 12V	2.2W	MOD50-LA1C-41	MOD50-LF1C-41	
	AC/DC 24V		MOD50-LA1F-41	MOD50-LF1F-41	
	AC 110V	6.1W	MOD50-LA1M-41	MOD50-LF1M-41	
	AC 220V		MOD50-LA1N-41	MOD50-LF1N-41	
5 Light	AC/DC 12V	2.7W	MOD50-LA1C-51	MOD50-LF1C-51	
	AC/DC 24V		MOD50-LA1F-51	MOD50-LF1F-51	
	AC 110V	7.0W	MOD50-LA1M-51	MOD50-LF1M-51	
	AC 220V		MOD50-LA1N-51	MOD50-LF1N-51	

Without pole

Style	Rated Voltage	Wattage	Model		Wire type
			Continuous Light	Continuous/Flashing Light With Warning Sound	
1 Light	AC/DC 12V	0.6W	MOD50-LA0C-11	MOD50-LF0C-11	Power source and Lead wire UL AWM1430 105° 300V VW-1 AWG20
	AC/DC 24V		MOD50-LA0F-11	MOD50-LF0F-11	
	AC 110V	3.4W	MOD50-LA0M-11	MOD50-LF0M-11	
	AC 220V		MOD50-LA0N-11	MOD50-LF0N-11	
2 Light	AC/DC 12V	1.2W	MOD50-LA0C-21	MOD50-LF0C-21	
	AC/DC 24V		MOD50-LA0F-21	MOD50-LF0F-21	
	AC 110V	4.3W	MOD50-LA0M-21	MOD50-LF0M-21	
	AC 220V		MOD50-LA0N-21	MOD50-LF0N-21	
3 Light	AC/DC 12V	1.7W	MOD50-LA0C-31	MOD50-LF0C-31	
	AC/DC 24V		MOD50-LA0F-31	MOD50-LF0F-31	
	AC 110V	5.2W	MOD50-LA0M-31	MOD50-LF0M-31	
	AC 220V		MOD50-LA0N-31	MOD50-LF0N-31	
4 Light	AC/DC 12V	2.2W	MOD50-LA0C-41	MOD50-LF0C-41	
	AC/DC 24V		MOD50-LA0F-41	MOD50-LF0F-41	
	AC 110V	6.1W	MOD50-LA0M-41	MOD50-LF0M-41	
	AC 220V		MOD50-LA0N-41	MOD50-LF0N-41	
5 Light	AC/DC 12V	2.7W	MOD50-LA0C-51	MOD50-LF0C-51	
	AC/DC 24V		MOD50-LA0F-51	MOD50-LF0F-51	
	AC 110V	7.0W	MOD50-LA0M-51	MOD50-LF0M-51	
	AC 220V		MOD50-LA0N-51	MOD50-LF0N-51	

Semi-manufactured goods order guide

Light Units Order

MOD50+AD24+BLUE

MOD50+AD24+WHITE

MOD50+AD24+GREEN

MOD50+AD24+ORANGE

MOD50+AD24+RED

MOD50+AD12+GREEN

- **Series No.**
- **Rate Voltage**
  AD12:AC/DC 12V
  AD24:AC/DC24V
- **Light Colour**
  RED
  GREEN
  BLUE
  ORANGE
  WHITE

Note: 1. AD12 Light units only for the 12V power supply.
2. AD24 light units can be used in every voltage type, except 12V power supply.

Top Cap Order

MOD50+TL

Main Body Order

Model type+M
(E.g.:MOD50-LE1F-11+M)

Long Screw Order

Layer	Length(mm)	P/N
1	46	MOD50+S1
2	75	MOD50+S2
3	104	MOD50+S3
4	133	MOD50+S4
5	163	MOD50+S5

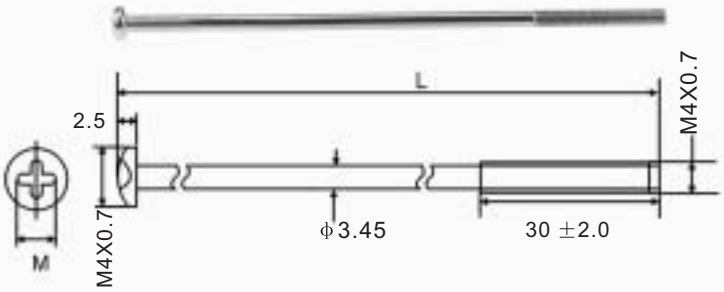

Assemble Guide

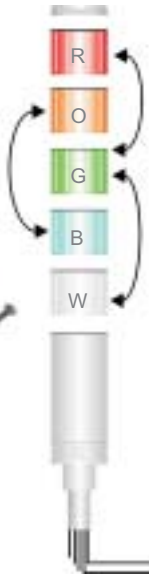

LED. Modules are interchangeable

Changing the colour configuration does not require re-wiring.

Note: When the same colour of LED modules are on one light tower, they will light simultaneously.

The colour of the LED. Module will always correspond to the colour of the wire

The wiring remains the same

Easy adding or removing

Up to five different colours can be stacked. The LED modules are easy to add or remove even after installation.

Note: Purchase of an add-on kit is required to add another colour.

MLD57

NPN/PNP

IP20

Optional parts

STZ-014

Optional parts

STZ-013 STZ-016 STZ-010 STZ-017

Dimensions

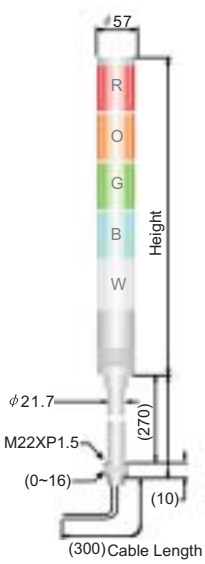

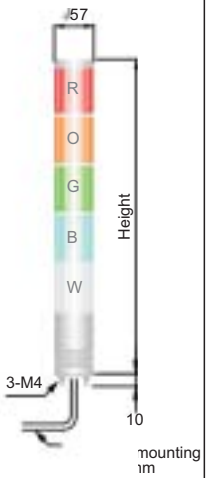

Height (mm)	
1Ligh t	: 160
2Lights	: 226
3Lights	: 292
4Lights	: 358
5Lights	: 424

Height (mm)	
1Light	: 160
2Lights	: 226
3Lights	: 292
4Lights	: 358
5Lights	: 424

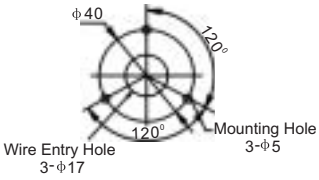

Wiring Diagram In Direct Power Connection

Continuous type

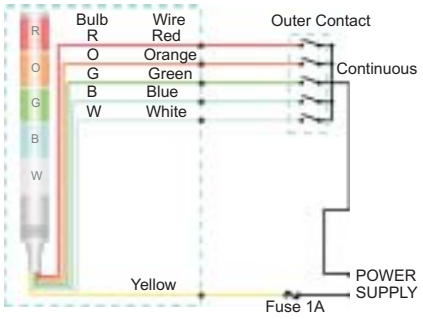

Flashing type

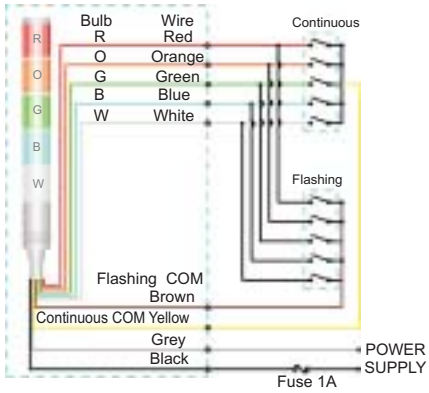

Wire colour

Bulb Unit Colour	Wire Colour
Red Unit	Red Wire
Orange Unit	Orange Wire
Green Unit	Green Wire
Blue Unit	Blue Wire
White Unit	White Wire

Describing

- Colours: Red, Orange, Green, Blue, White (combination in photo is standard; for other combinations, please contact us)
- Lens: Polycarbonate resin with superior resistance to impact and heat.
- The unique vibration absorbing structure using new materials helps reduce vibration and impact from all machines and Devices, greatly extending bulb life.
- Long-life vibration-resistant bulbs are used.
- Colour combinations can be easily changed.
- Various types of information can displayed by using different colours controlled by several (1 to 5) external signals.
- Prism-cut lens disperses the light source, improving visibility.
- The CSA & CE marking is available. The CSA approval number is 219967-143081.
- Custom poles up to 1000mm long are available as an extra cost option.
- For operating the external contact or switch, use a toggle switch, relay switch, limit switch, etc. (No-contact or relay for Flashing model cannot be used due to the influence of leak current.)
- As the body of 12V models is grounded, when using 12V AC, always use an insulation transformer power source.
- This series has Continuous Light and Continuous/Flashing type according to operation methods.
- This series has normal, with pole, Paint, Paint and with pole type according to Distinguish code..
- For details information, please refer to selection guide.
- Vibration Resistance:10~55HZ Frequency,0.5mm amplitude in Y direction for 40 minutes.
- Shock resistance 500m/s^2 acceleration(approx.50G)in Y direction for three times.

Type

With pole

Style	Rated Voltage	Bulb	Model		Wire type
			Continuous Light	Continuous/Flashing Light	
1 Light	AC/DC 12V	12V 10W	MLD57-BA1C-11	MLD57-BC1C-11	Power source and Lead wire UL AWM1430 105° 300V VW-1 AWG20
	AC/DC 24V	30V 10W	MLD57-BA1F-11	MLD57-BC1F-11	
	AC 110V	110V 15W	MLD57-BA1M-11	MLD57-BC1M-11	
	AC 220V	220V 15W	MLD57-BA1N-11	MLD57-BC1N-11	
2 Light	AC/DC 12V	12V 10W	MLD57-BA1C-21	MLD57-BC1C-21	
	AC/DC 24V	30V 10W	MLD57-BA1F-21	MLD57-BC1F-21	
	AC 110V	110V 15W	MLD57-BA1M-21	MLD57-BC1M-21	
	AC 220V	220V 15W	MLD57-BA1N-21	MLD57-BC1N-21	
3 Light	AC/DC 12V	12V 10W	MLD57-BA1C-31	MLD57-BC1C-31	
	AC/DC 24V	30V 10W	MLD57-BA1F-31	MLD57-BC1F-31	
	AC 110V	110V 15W	MLD57-BA1M-31	MLD57-BC1M-31	
	AC 220V	220V 15W	MLD57-BA1N-31	MLD57-BC1N-31	
4 Light	AC/DC 12V	12V 10W(5W Flashing)	MLD57-BA1C-41	MLD57-BC1C-41	
	AC/DC 24V	30V 10W	MLD57-BA1F-41	MLD57-BC1F-41	
	AC 110V	110V 15W	MLD57-BA1M-41	MLD57-BC1M-41	
	AC 220V	220V 15W	MLD57-BA1N-41	MLD57-BC1N-41	
5 Light	AC/DC 12V	12V 10W(5W Flashing)	MLD57-BA1C-51	MLD57-BC1C-51	
	AC/DC 24V	30V 10W	MLD57-BA1F-51	MLD57-BC1F-51	
	AC 110V	110V 15W	MLD57-BA1M-51	MLD57-BC1M-51	
	AC 220V	220V 15W	MLD57-BA1N-51	MLD57-BC1N-51	

Without pole

Style	Rated Voltage	Bulb	Model		Wire type
			Continuous Light	Continuous/Flashing Light	
1 Light	AC/DC 12V	12V 10W	MLD57-BA0C-11	MLD57-BC0C-11	Power source and Lead wire UL AWM1430 105° 300V VW-1 AWG20
	AC/DC 24V	30V 10W	MLD57-BA0F-11	MLD57-BC0F-11	
	AC 110V	110V 15W	MLD57-BA0M-11	MLD57-BC0M-11	
	AC 220V	220V 15W	MLD57-BA0N-11	MLD57-BC0N-11	
2 Light	AC/DC 12V	12V 10W	MLD57-BA0C-21	MLD57-BC0C-21	
	AC/DC 24V	30V 10W	MLD57-BA0F-21	MLD57-BC0F-21	
	AC 110V	110V 15W	MLD57-BA0M-21	MLD57-BC0M-21	
	AC 220V	220V 15W	MLD57-BA0N-21	MLD57-BC0N-21	
3 Light	AC/DC 12V	12V 10W	MLD57-BA0C-31	MLD57-BC0C-31	
	AC/DC 24V	30V 10W	MLD57-BA0F-31	MLD57-BC0F-31	
	AC 110V	110V 15W	MLD57-BA0M-31	MLD57-BC0M-31	
	AC 220V	220V 15W	MLD57-BA0N-31	MLD57-BC0N-31	
4 Light	AC/DC 12V	12V 10W(5W Flashing)	MLD57-BA0C-41	MLD57-BC0C-41	
	AC/DC 24V	30V 10W	MLD57-BA0F-41	MLD57-BC0F-41	
	AC 110V	110V 15W	MLD57-BA0M-41	MLD57-BC0M-41	
	AC 220V	220V 15W	MLD57-BA0N-41	MLD57-BC0N-41	
5 Light	AC/DC 12V	12V 10W(5W Flashing)	MLD57-BA0C-51	MLD57-BC0C-51	
	AC/DC 24V	30V 10W	MLD57-BA0F-51	MLD57-BC0F-51	
	AC 110V	110V 15W	MLD57-BA0M-51	MLD57-BC0M-51	
	AC 220V	220V 15W	MLD57-BA0N-51	MLD57-BC0N-51	

MOD57

Optional parts

STZ-014

Optional parts

STZ-013 STZ-016 STZ-010 STZ-017

Dimensions

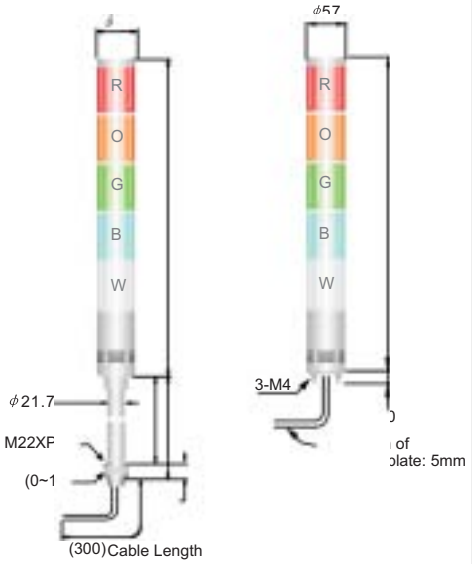

Height (mm)	
1Ligh t	: 160
2Lights	: 226
3Lights	: 292
4Lights	: 358
5Lights	: 424

Height (mm)	
1Light	: 160
2Lights	: 226
3Lights	: 292
4Lights	: 358
5Lights	: 424

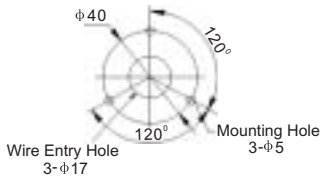

Wiring Diagram In Direct Power Connection

Continuous type
AC/DC 24V type

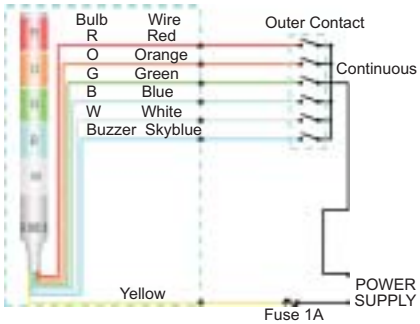

AC 110V/220V type

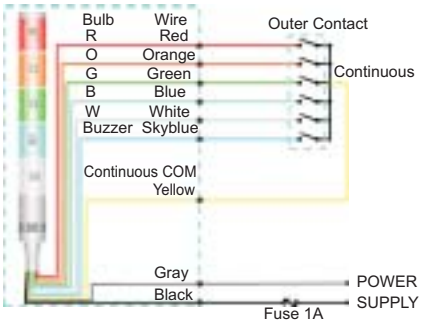

Flashing type
AC/DC 24V type

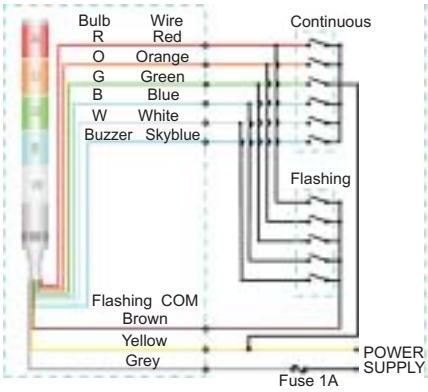

AC 110V/220V type

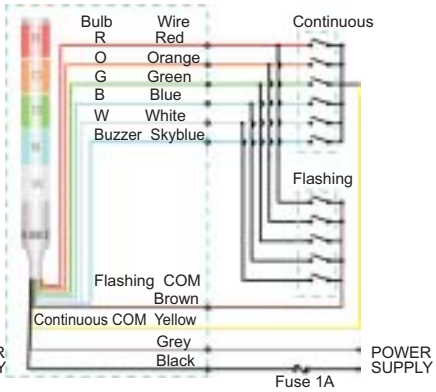

Wire colour

Bulb Unit Colour	Wire Colour
Red Unit	Red Wire
Orange Unit	Orange Wire
Green Unit	Green Wire
Blue Unit	Blue Wire
White Unit	White Wire
NO	Wire Colour
Buzzer	Skyblue Wire

Describing

- Colours: Red, Orange, Green, Blue, White (combination in photo is standard; for other combinations, other Combinations, please contact us).
- Lens: Polycarbonate resin with superior resistance to impact and heat.
- The unique vibration absorbing structure using new materials helps reduce vibration and impact from all machines and Devices, greatly extending bulb life.
- Long-life vibration-resistant bulbs are used.
- Colour combinations can be easily changed.
- Prism-cut lens disperses the light source, improving visibility.
  Various types of information can be displayed by using different colours controlled by several (1 to 5) external signals.
- Buzzer sound, lighting, and flickering can all be controlled independently.
- High power sound volume; Max 75 dB/m
- The CSA & CE marking is available. The CSA approval number is 219967-143081.
- This series has Continuous Light with warning sound and Continuous/ Flashing Light with warning sound type according to Distinguish code.
- This series has normal, with pole type according to operation methods.
- For details information, please refer to selection guide.
- Vibration Resistance:10~55HZ Frequency, 0.5mm amplitude in Y direction for 40 minutes.
- Shock resistance 500m/s^2 acceleration(approx.50G)in Y direction for three times.

Type

With pole

Style	Rated Voltage	Bulb	Model		Wire type
			Continuous Light With Warning Sound	Continuous/Flashing Light With Warning Sound	
1 Light	AC/DC 24V	30V 10W	MOD57-BD1F-11	MOD57-BF1F-11	Power source and Lead wire UL AWM1430 105° 300V VW-1 AWG20
	AC 110V	110V 15W	MOD57-BD1M-11	MOD57-BF1M-11	
	AC 220V	220V 15W	MOD57-BD1N-11	MOD57-BF1N-11	
2 Light	AC/DC 24V	30V 10W	MOD57-BD1F-21	MOD57-BF1F-21	
	AC 110V	110V 15W	MOD57-BD1M-21	MOD57-BF1M-21	
	AC 220V	220V 15W	MOD57-BD1N-21	MOD57-BF1N-21	
3 Light	AC/DC 24V	30V 10W	MOD57-BD1F-31	MOD57-BF1F-31	
	AC 110V	110V 15W	MOD57-BD1M-31	MOD57-BF1M-31	
	AC 220V	220V 15W	MOD57-BD1N-31	MOD57-BF1N-31	
4 Light	AC/DC 24V	30V 10W	MOD57-BD1F-41	MOD57-BF1F-41	
	AC 110V	110V 15W	MOD57-BD1M-41	MOD57-BF1M-41	
	AC 220V	220V 15W	MOD57-BD1N-41	MOD57-BF1N-41	
5 Light	AC/DC 24V	30V 10W	MOD57-BD1F5-1	MOD57-BF1F5-1	
	AC 110V	110V 15W	MOD57-BD1M5-1	MOD57-BF1M5-1	
	AC 220V	220V 15W	MOD57-BD1N5-1	MOD57-BF1N5-1	

Without pole

Style	Rated Voltage	Bulb	Model		Wire type
			Continuous Light With Warning Sound	Continuous/Flashing Light With Warning Sound	
1 Light	AC/DC 24V	30V 10W	MOD57-BD0F-11	MOD57-BF0F-11	Power source and Lead wire UL AWM1430 105° 300V VW-1 AWG20
	AC 110V	110V 15W	MOD57-BD0M-11	MOD57-BF0M-11	
	AC 220V	220V 15W	MOD57-BD0N-11	MOD57-BF0N-11	
2 Light	AC/DC 24V	30V 10W	MOD57-BD0F-21	MOD57-BF0F-21	
	AC 110V	110V 15W	MOD57-BD0M-21	MOD57-BF0M-21	
	AC 220V	220V 15W	MOD57-BD0N-21	MOD57-BF0N-21	
3 Light	AC/DC 24V	30V 10W	MOD57-BD0F-31	MOD57-BF0F-31	
	AC 110V	110V 15W	MOD57-BD0M-31	MOD57-BF0M-31	
	AC 220V	220V 15W	MOD57-BD0N-31	MOD57-BF0N-31	
4 Light	AC/DC 24V	30V 10W	MOD57-BD0F-41	MOD57-BF0F-41	
	AC 110V	110V 15W	MOD57-BD0M-41	MOD57-BF0M-41	
	AC 220V	220V 15W	MOD57-BD0N-41	MOD57-BF0N-41	
5 Light	AC/DC 24V	30V 10W	MOD57-BD0F5-1	MOD57-BF0F5-1	
	AC 110V	110V 15W	MOD57-BD0M5-1	MOD57-BF0M5-1	
	AC 220V	220V 15W	MOD57-BD0N5-1	MOD57-BF0N5-1	

MOD57

2 sounds 70-80dB/m | NPN/PNP | IP54

Optional parts

STZ-014

Optional parts

STZ-013 STZ-016 STZ-010 STZ-017

Dimensions

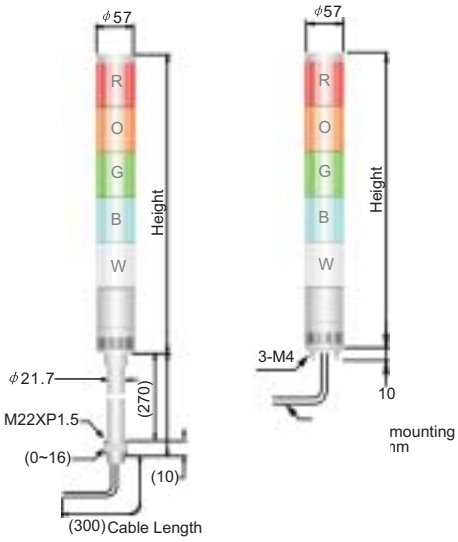

Height (mm)	
1Ligh t	: 257
2Lights	: 324
3Lights	: 391
4Lights	: 458
5Lights	: 525

Height (mm)	
1Light	: 249
2Lights	: 316
3Lights	: 383
4Lights	: 450
5Lights	: 517

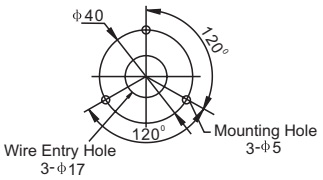

Wiring Diagram In Direct Power Connection

Continuous type
AC/DC 12V/24V type

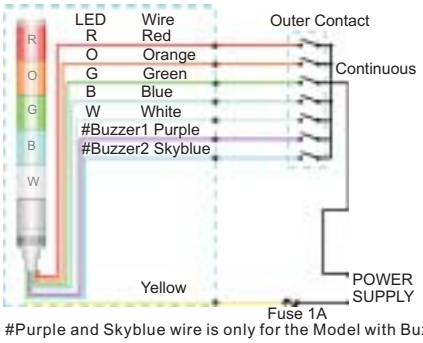

AC 110V/220V type

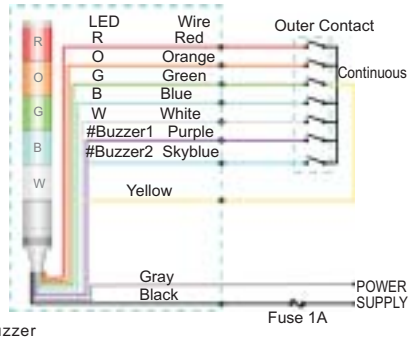

#Purple and Skyblue wire is only for the Model with Buzzer

Flashing type
AC/DC 12V/24V type

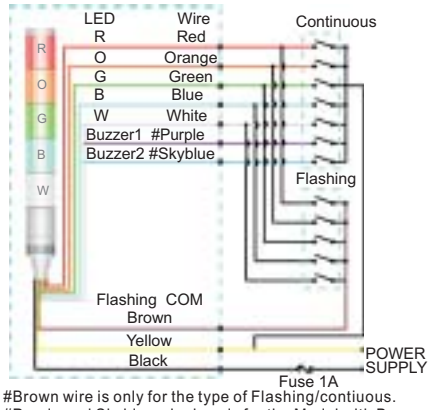

#Brown wire is only for the type of Flashing/contiuous.
#Purple and Skyblue wire is only for the Model with Buzzer.

AC 110V/220V type

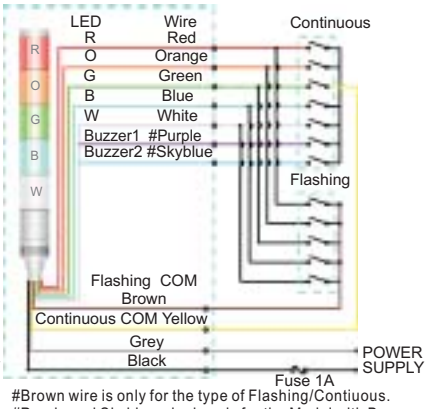

#Brown wire is only for the type of Flashing/Contiuous.
#Purple and Skyblue wire is only for the Model with Buzzer.

Wire colour

LED Unit Colour	Wire Colour
Red Unit	Red Wire
Orange Unit	Orange Wire
Green Unit	Green Wire
Blue Unit	Blue Wire
White Unit	White Wire
Buzzer1	Purple Wire
Buzzer2	Skyblue Wire

Open collector (24V)

DC Type
NPN Transistor

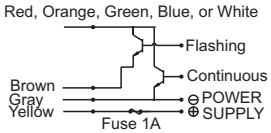

PNP transistor

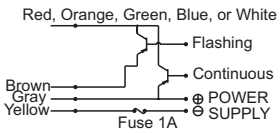

#Five wires (Red, Orange, Green, Blue, White)are connected regardless of the number of LED Unit.

Describing

- Colours: Red, Orange, Super-high-intensity Green, Super-high-intensity Blue, Super-high-intensity White (Combination in photo is standard, for other combinations, please contact us.)
- Lens: Acrylic resin with superior weather resistance and light translucence.
- Our newly developed LED reflection system, improved luminosity and ends the problem of burned out bulbs.
- Thanks to the newly designed structure with independent colour unit, colour combinations can be easily changed.
- The buzzer has 2 different gentle sounds high volume;70-80 dB/m.
- Prism-cut lens disperses the light source, improving visibility.
- This model contains open-collector type NPN, PNP transistor which allows direct connection to Programmable controller.(100/220V type NPN only)
- The CSA & CE marking is available. The CSA approval number is 219967-143081.
- This series has Continuous , Continuous/Flashing, Continuous with warning sound and Continuous/Flashing with warning sound type according to operation methods.
- This series has normal, with pole type according to Distinguish code..
- For details information, please refer to selection guide.
- Vibration Resistance:10~55HZ Frequency, 0.5mm amplitude in Y direction for 40 minutes.
- Shock resistance 500m/s^2 acceleration(approx.50G)in Y direction for three times.

Type

With pole

Style	Rated Voltage	Wattage	Model				Wire type
			Continuous Light	Continuous/ Flashing Light	Continuous Light With Warning Sound	Continuous/ Flashing Light With Warning Sound	
1 Light	AC/DC 12V	1.5W	MOD57-LA1C-11	MOD57-LC1C-11	MOD57-LD1C-11	MOD57-LF1C-11	Power source and Lead wire UL AWM1430 105° 300V VW-1 AWG20
	AC/DC 24V		MOD57-LA1F-11	MOD57-LC1F-11	MOD57-LD1F-11	MOD57-LF1F-11	
	AC 110V	3.0W	MOD57-LA1M-11	MOD57-LC1M-11	MOD57-LD1M-11	MOD57-LF1M-11	
	AC 220V	3.5W	MOD57-LA1N-11	MOD57-LC1N-11	MOD57-LD1N-11	MOD57-LF1N-11	
2 Light	AC/DC 12V	2.5W	MOD57-LA1C-21	MOD57-LC1C-21	MOD57-LD1C-21	MOD57-LF1C-21	
	AC/DC 24V		MOD57-LA1F-21	MOD57-LC1F-21	MOD57-LD1F-21	MOD57-LF1F-21	
	AC 110V	5.0W	MOD57-LA1M-21	MOD57-LC1M-21	MOD57-LD1M-21	MOD57-LF1M-21	
	AC 220V	5.5W	MOD57-LA1N-21	MOD57-LC1N-21	MOD57-LD1N-21	MOD57-LF1N-21	
3 Light	AC/DC 12V	3.5W	MOD57-LA1C-31	MOD57-LC1C-31	MOD57-LD1C-31	MOD57-LF1C-31	
	AC/DC 24V		MOD57-LA1F-31	MOD57-LC1F-31	MOD57-LD1F-31	MOD57-LF1F-31	
	AC 110V	6.5W	MOD57-LA1M-31	MOD57-LC1M-31	MOD57-LD1M-31	MOD57-LF1M-31	
	AC 220V	7.0W	MOD57-LA1N-31	MOD57-LC1N-31	MOD57-LD1N-31	MOD57-LF1N-31	
4 Light	AC/DC 12V	4.5W	MOD57-LA1C-41	MOD57-LC1C-41	MOD57-LD1C-41	MOD57-LF1C-41	
	AC/DC 24V		MOD57-LA1F-41	MOD57-LC1F-41	MOD57-LD1F-41	MOD57-LF1F-41	
	AC 110V	7.5W	MOD57-LA1M-41	MOD57-LC1M-41	MOD57-LD1M-41	MOD57-LF1M-41	
	AC 220V	8.5W	MOD57-LA1N-41	MOD57-LC1N-41	MOD57-LD1N-41	MOD57-LF1N-41	
5 Light	AC/DC 12V	5.5W	MOD57-LA1C-51	MOD57-LC1C-51	MOD57-LD1C-51	MOD57-LF1C-51	
	AC/DC 24V		MOD57-LA1F-51	MOD57-LC1F-51	MOD57-LD1F-51	MOD57-LF1F-51	
	AC 110V	8.5W	MOD57-LA1M-51	MOD57-LC1M-51	MOD57-LD1M-51	MOD57-LF1M-51	
	AC 220V	10.0W	MOD57-LA1N-51	MOD57-LC1N-51	MOD57-LD1N-51	MOD57-LF1N-51	

Without pole

Style	Rated Voltage	Wattage	Model				Wire type
			Continuous Light	Continuous/ Flashing Light	Continuous Light With Warning Sound	Continuous /Flashing Light With Warning Sound	
1 Light	AC/DC 12V	1.5W	MOD57-LA0C-11	MOD57-LC0C-11	MOD57-LD0C-11	MOD57-LF0C-11	Power source and Lead wire UL AWM1430 105° 300V VW-1 AWG20
	AC/DC 24V		MOD57-LA0F-11	MOD57-LC0F-11	MOD57-LD0F-11	MOD57-LF0F-11	
	AC 110V	3.0W	MOD57-LA0M-11	MOD57-LC0M-11	MOD57-LD0M-11	MOD57-LF0M-11	
	AC 220V	3.5W	MOD57-LA0N-11	MOD57-LC0N-11	MOD57-LD0N-11	MOD57-LF0N-11	
2 Light	AC/DC 12V	2.5W	MOD57-LA0C-21	MOD57-LC0C-21	MOD57-LD0C-21	MOD57-LF0C-21	
	AC/DC 24V		MOD57-LA0F-21	MOD57-LC0F-21	MOD57-LD0F-21	MOD57-LF0F-21	
	AC 110V	5.0W	MOD57-LA0M-21	MOD57-LC0M-21	MOD57-LD0M-21	MOD57-LF0M-21	
	AC 220V	5.5W	MOD57-LA0N-21	MOD57-LC0N-21	MOD57-LD0N-21	MOD57-LF0N-21	
3 Light	AC/DC 12V	3.5W	MOD57-LA0C-31	MOD57-LC0C-31	MOD57-LD0C-31	MOD57-LF0C-31	
	AC/DC 24V		MOD57-LA0F-31	MOD57-LC0F-31	MOD57-LD0F-31	MOD57-LF0F-31	
	AC 110V	6.5W	MOD57-LA0M-31	MOD57-LC0M-31	MOD57-LD0M-31	MOD57-LF0M-31	
	AC 220V	7.0W	MOD57-LA0N-31	MOD57-LC0N-31	MOD57-LD0N-31	MOD57-LF0N-31	
4 Light	AC/DC 12V	4.5W	MOD57-LA0C-41	MOD57-LC0C-41	MOD57-LD0C-41	MOD57-LF0C-41	
	AC/DC 24V		MOD57-LA0F-41	MOD57-LC0F-41	MOD57-LD0F-41	MOD57-LF0F-41	
	AC 110V	7.5W	MOD57-LA0M-41	MOD57-LC0M-41	MOD57-LD0M-41	MOD57-LF0M-41	
	AC 220V	8.5W	MOD57-LA0N-41	MOD57-LC0N-41	MOD57-LD0N-41	MOD57-LF0N-41	
5 Light	AC/DC 12V	5.5W	MOD57-LA0C-51	MOD57-LC0C-51	MOD57-LD0C-51	MOD57-LF0C-51	
	AC/DC 24V		MOD57-LA0F-51	MOD57-LC0F-51	MOD57-LD0F-51	MOD57-LF0F-51	
	AC 110V	8.5W	MOD57-LA0M-51	MOD57-LC0M-51	MOD57-LD0M-51	MOD57-LF0M-51	
	AC 220V	10.0W	MOD57-LA0N-51	MOD57-LC0N-51	MOD57-LD0N-51	MOD57-LF0N-51	

Semi-manufactured goods order guide

Light Units Order

MOD57+AD24+BLUE

MOD57+AD24+WHITE

MOD57+AD24+GREEN

MOD57+AD24+ORANGE

MOD57+AD24+RED

MOD57+AD12+GREEN

- **Series No.**
- **Rate Voltage**
  AD12:AC/DC 12V
  AD24:AC/DC24V
- **Light Colour**
  RED
  GREEN
  BLUE
  ORANGE
  WHITE

Note: 1. AD12 Light units only for the 12V power supply.
2. AD24 light units can be used in every voltage type, except 12V power supply.

Top Cap Order

MOD57+TL

Main Body Order

Model type+M
(E.g.: MOD57-LF1F-11+M)

Long Screw Order

Layer	Length(mm)	P/N
1	90	MOD57+S1
2	156	MOD57+S2
3	222	MOD57+S3
4	288	MOD57+S4
5	354	MOD57+S5

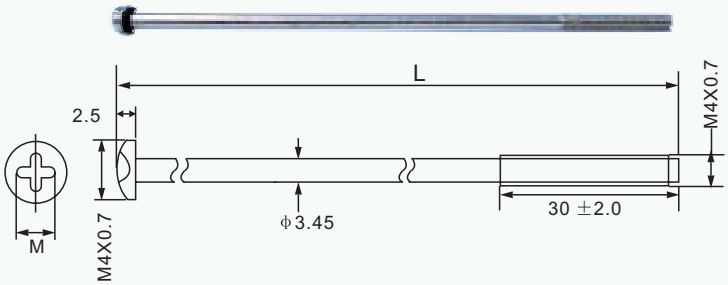

Assemble Guide

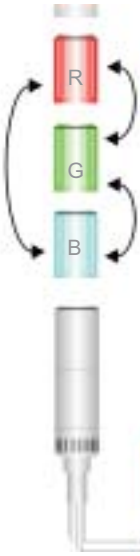

LED. Modules are interchangeable

Changing the colour configuration does not require re-wiring.

Note: When the same colour of LED modules are on one light tower, they will light simultaneously.

The wiring remains the same

The colour of the LED. Module will always correspond to the colour of the wire

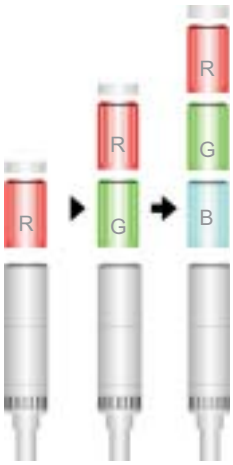

Easy adding or removing

Up to five different colours can be stacked. The LED modules are easy to add or remove even after installation.

Note: Purchase of an add-on kit is required to add another colour.

MOD70

2 different sounds 80dB/m | NPN/PNP | IP54 | Vibration Proof

Optional parts

STZ-50L STZ-50T STZ-017

Dimensions

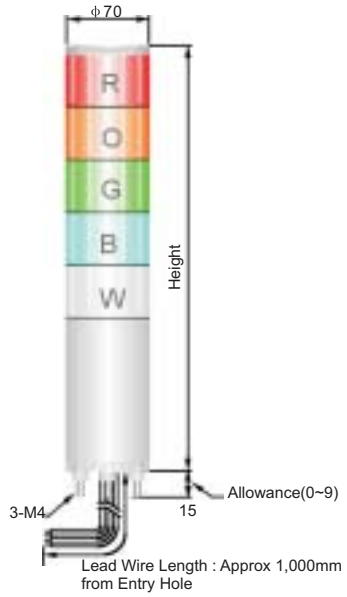

Height (mm)	
1Light	221
2Lights	252
3Lights	294
4Lights	335
5Lights	376

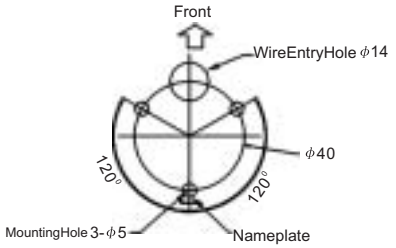

Wiring Diagram In Direct Power Connection

Continuous type
AC/DC 24V

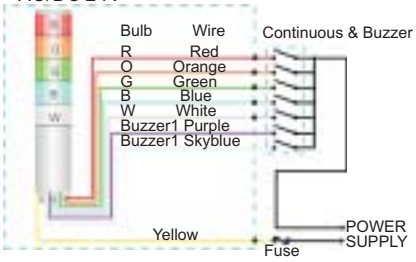

Continuous type
AC 110V/220V

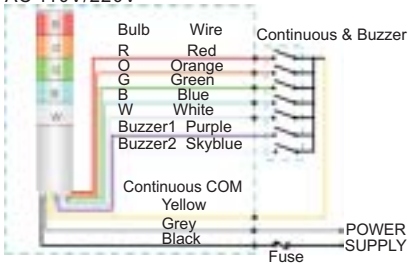

Flashing type
AC/DC 24V

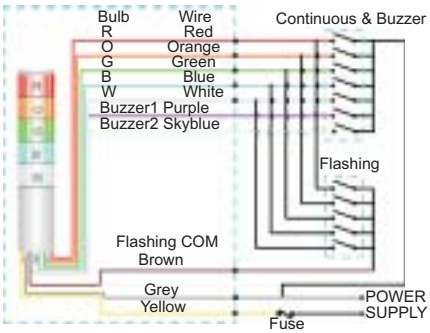

Flashing type
AC 110V/220V

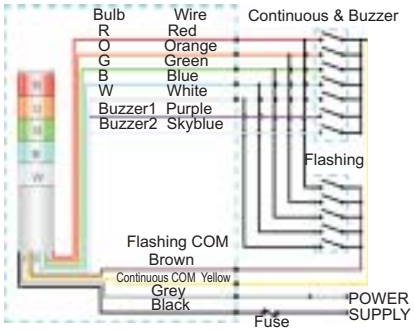

Wire colour

Bulb Unit Colour	Wire Colour
Red Unit	Red Wire
Orange Unit	Orange Wire
Green Unit	Green Wire
Blue Unit	Blue Wire
White Unit	White Wire

Open collector (24V)

NPN transistor

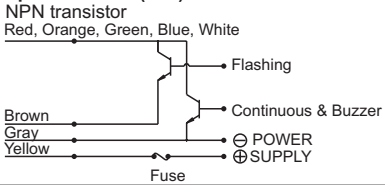

PNP transistor

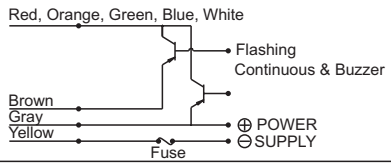

SIGNAL TOWER

Describing

- Colours: Red, Orange, Green, Blue, Clear(combination in photo is standard; for other combinations, please contact us)
- Lens: Polycarbonate resin with superior resistance to impact and heat.
- Unique vibration absorbing structure and newly developed vibration resistant bulb help to reduce vibration and impact from all machineries and greatly extend bulb life.
- Bayonet base bulb not to be loosen by vibration.
- Newly developed prism cut lens offers the brightest light available and improved the visibility from all directions.
- Meets IP-54 for wash-down requirements.
- The buzzer has 2different gentle sounds high volume; 80dB/m
- Snap-in connectors make the unit easily detachable.
- This model contains open-collector type NPN, PNP transistor which allows direct connection to Programmable Controller. (24V type only)
- The CSA & CE marking is available. The CSA approval number is 219967-143081.
- This series has Continuous, Continuous/Flashing, Continuous with warning sound and Continuous/Flashing with warning sound type according to operation methods.
- This series has normal, with pole type according to Distinguish code.
- For details information, please refer to selection guide.
- Vibration Resistance:10~55HZ Frequency,0.5mm amplitude in Y direction for 40 minutes.
- Shock resistance 500m/s^2 acceleration(approx.50G)in Y direction for three times.

Type

With pole

Style	Rated Voltage	Bulb	Model				Wire type
			Continuous Light	Continuous / Flashing Light	Continuous Light With Warning Sound	Continuous /Flashing Light With Warning Sound	
1 Light	AC/DC 24V	28V 11W	MOD70-BA1F-11	MOD70-BC1F-11	MOD70-BD1F-11	MOD70-BF1F-11	Power source and Lead wire UL AWM1430 105° 300V VW-1 AWG20
	AC 110V	110V 12W	MOD70-BA1M-11	MOD70-BC1M-11	MOD70-BD1M-11	MOD70-BF1M-11	
	AC 220V	250V 11W	MOD70-BA1N-11	MOD70-BC1N-11	MOD70-BD1N-11	MOD70-BF1N-11	
2 Light	AC/DC 24V	28V 11W	MOD70-BA1F-21	MOD70-BC1F-21	MOD70-BD1F-21	MOD70-BF1F-21	
	AC 110V	110V 12W	MOD70-BA1M-21	MOD70-BC1M-21	MOD70-BD1M-21	MOD70-BF1M-21	
	AC 220V	250V 11W	MOD70-BA1N-21	MOD70-BC1N-21	MOD70-BD1N-21	MOD70-BF1N-21	
3 Light	AC/DC 24V	28V 11W	MOD70-BA1F-31	MOD70-BC1F-31	MOD70-BD1F-31	MOD70-BF1F-31	
	AC 110V	110V 12W	MOD70-BA1M-31	MOD70-BC1M-31	MOD70-BD1M-31	MOD70-BF1M-31	
	AC 220V	250V 11W	MOD70-BA1N-31	MOD70-BC1N-31	MOD70-BD1N-31	MOD70-BF1N-31	
4 Light	AC/DC 24V	28V 11W	MOD70-BA1F-41	MOD70-BC1F-41	MOD70-BD1F-41	MOD70-BF1F-41	
	AC 110V	110V 12W	MOD70-BA1M-41	MOD70-BC1M-41	MOD70-BD1M-41	MOD70-BF1M-41	
	AC 220V	250V 11W	MOD70-BA1N-41	MOD70-BC1N-41	MOD70-BD1N-41	MOD70-BF1N-41	
5 Light	AC/DC 24V	28V 11W	MOD70-BA1F-51	MOD70-BC1F-51	MOD70-BD1F-51	MOD70-BF1F-51	
	AC 110V	110V 12W	MOD70-BA1M-51	MOD70-BC1M-51	MOD70-BD1M-51	MOD70-BF1M-51	
	AC 220V	220V 15W	MOD70-BA1N-51	MOD70-BC1N-51	MOD70-BD1N-51	MOD70-BF1N-51	

Without pole

Style	Rated Voltage	Bulb	Model				Wire type
			Continuous Light	Continuous / Flashing Light	Continuous Light With Warning Sound	Continuous/Flashing Light With Warning Sound	
1 Light	AC/DC 24V	28V 11W	MOD70-BA0F-11	MOD70-BC0F-11	MOD70-BD0F-11	MOD70-BF0F-11	Power source and Lead wire UL AWM1430 105° 300V VW-1 AWG20
	AC 110V	110V 12W	MOD70-BA0M-11	MOD70-BC0M-11	MOD70-BD0M-11	MOD70-BF0M-11	
	AC 220V	250V 11W	MOD70-BA0N-11	MOD70-BC0N-11	MOD70-BD0N-11	MOD70-BF0N-11	
2 Light	AC/DC 24V	28V 11W	MOD70-BA0F-21	MOD70-BC0F-21	MOD70-BD0F-21	MOD70-BF0F-21	
	AC 110V	110V 12W	MOD70-BA0M-21	MOD70-BC0M-21	MOD70-BD0M-21	MOD70-BF0M-21	
	AC 220V	250V 11W	MOD70-BA0N-21	MOD70-BC0N-21	MOD70-BD0N-21	MOD70-BF0N-21	
3 Light	AC/DC 24V	28V 11W	MOD70-BA0F-31	MOD70-BC0F-31	MOD70-BD0F-31	MOD70-BF0F-31	
	AC 110V	110V 12W	MOD70-BA0M-31	MOD70-BC0M-31	MOD70-BD0M-31	MOD70-BF0M-31	
	AC 220V	250V 11W	MOD70-BA0N-31	MOD70-BC0N-31	MOD70-BD0N-31	MOD70-BF0N-31	
4 Light	AC/DC 24V	28V 11W	MOD70-BA0F-41	MOD70-BC0F-41	MOD70-BD0F-41	MOD70-BF0F-41	
	AC 110V	110V 12W	MOD70-BA0M-41	MOD70-BC0M-41	MOD70-BD0M-41	MOD70-BF0M-41	
	AC 220V	250V 11W	MOD70-BA0N-41	MOD70-BC0N-41	MOD70-BD0N-41	MOD70-BF0N-41	
5 Light	AC/DC 24V	28V 11W	MOD70-BA0F-51	MOD70-BC0F-51	MOD70-BD0F-51	MOD70-BF0F-51	
	AC 110V	110V 12W	MOD70-BA0M-51	MOD70-BC0M-51	MOD70-BD0M-51	MOD70-BF0M-51	
	AC 220V	220V 15W	MOD70-BA0N-51	MOD70-BC0N-51	MOD70-BD0N-51	MOD70-BF0N-51	

MOD70

2 sounds 70~90dB/m | NPN/PNP | IP65

Optional parts

STZ-50L STZ-50T STZ-017

Dimensions

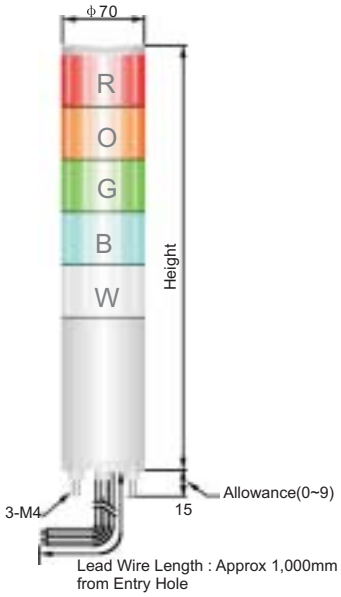

Height (mm)	
1Light	221
2Lights	252
3Lights	294
4Lights	335
5Lights	376

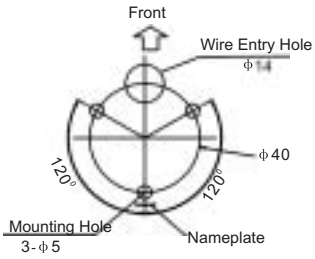

Wiring Diagram in Direct Power Connection

Continuous type
AC/DC 12/24V

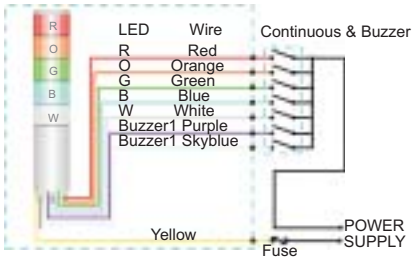

Continuous type
AC 110/220V

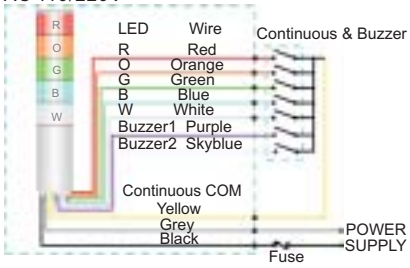

Flashing type
AC/DC 12/24V

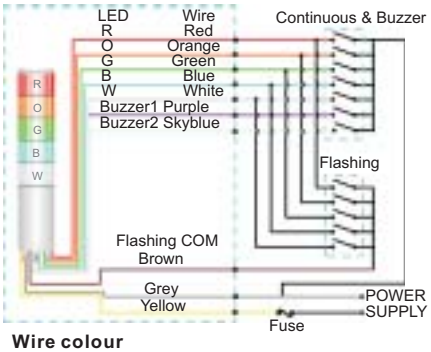

Flashing type
AC 110/220V

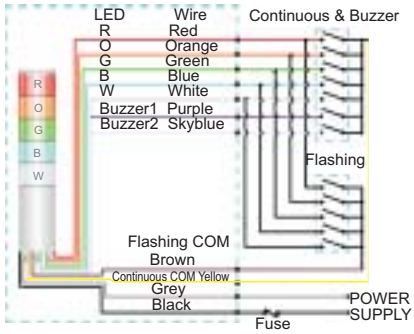

Wire colour

LED Unit Colour	Wire Colour
Red Unit	Red Wire
Orange Unit	Orange Wire
Green Unit	Green Wire
Blue Unit	Blue Wire
White Unit	White Wire

AC100/220V

NPN transistor

Red, Orange, Green, Blue, White

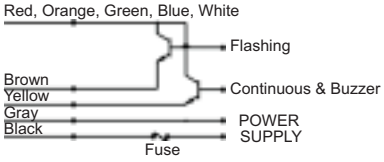

Open collector (24V)

NPN transistor

Red, Orange, Green, Blue, White

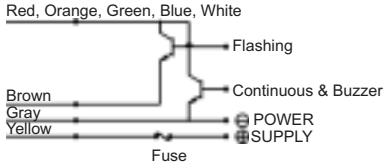

PNP transistor
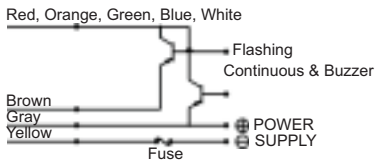
Red, Orange, Green, Blue, White